UPGRADING OF COMPACT LOAD BREAK SWITCHES TO A CIRCUIT BREAKER FUNCTION

G.C. Schoonenberg, A.R.A. Pikkert, P.Voulon
Holec Medium Voltage
P.O. box 32, 7550AA, Hengelo, The Netherlands
Tel: +31 74 246 9111, Fax: +31 74 246 4444, E-mail: info@holec.nl

ABSTRACT

This paper describes a relatively simple and economical solution to increase the functionality of existing single pole operated 12kV Ring Main Units type Magnefix with a vacuum circuit breaker function in the same system philosophy.
The Magnefix design is used in the Dutch and many other underground medium voltage distribution networks since 1960 and safe connection of the ring cables is realised with single pole operated load break switches of the hard-gas design.
For the protection of the power transformers use is made until now of high voltage fuses in series with the same single pole hard-gas design of load break switches.
These Ring Main Units are mostly situated in the network in standarised transformer stations with very compact dimensions.
Due to the increasing amount of electrical energy distributed through these networks, limited available dimensions in the transformer stations and the need for threephase switching and protection of the power transformers the existing design has been extended with a vacuum circuit breaker for tripping, mounted in epoxy resin mouldings, including a dedicated stand-alone electronic protection relay.
Limitation of costs and needed space play an important role. These factors have led to the described design with single pole manual closing and threepole tripping. Due to the very small dimensions of this solution the existing compact transformerstations can be used, giving an important saving on building costs for the network operator.
This development created a very safe, compact and effective solution in the network for the connection and protection of power transformers and subring cables.

UPGRADE D'INTERRUPTEURS COMPACTS VERS UNE FONTIONALITE DISJONCTEUR

G.C. Schoonenberg, A.R.A. Pikkert, P.Voulon
Holec Medium Voltage
P.O. box 32, 7550AA, Hengelo, The Netherlands
Tel: +31 74 246 9111, Fax: +31 74 246 4444, E-mail: info@holec.nl

« ABSTRACT «

L'article décrit une nouvelle caractéristique de l'appareillage , mondialement utilisé, Holec 12 kV RMU type Magnefix.
Il s'agit d'une solution relativement simple et économique pour augmenter la fonctionalité du concept jusqu'à une fonction disjoncteur et ceci en respectant la philosophie du système.
La coupure à vide est utilisé pour cette nouvelle fonction disjoncteur.
Après un bref descriptif de la philosophie Magnefix, les arguments et demandes du marché ,dirigeant vers cette nouvelle fonctionalité sont discutées.
Les demandes de puissances augmentées, le développement de nouveaux boucles dans les réseaux existants et les contraintes d'espace dans les postes de transformation existants et nouveaux sont discutés. Le concept et la philosophie derrière la fonction disjoncteur dans le Magnefix seront présentées. Le concept existant a été élargi avec un disjoncteur à coupure sous vide, monté dans des pièces moulées dans la résine époxy, ainsi qu'une protection autonome par relais électronique Les limitations de coûts et espace jouent un rôle important. Ces facteurs ont résulté dans le concept décrit avec enclenchement unipolaire et déclenchement tripolaire.Grace aux dimensions très limitées de la solution, les postes de transformation existants peuvent être maintenues, résultant dans une réduction des coûts pour l'opérateur du réseau.
Les manoeuvres et procédures en pratique pour la mise à la terre et les essais seront discutées
Les essais Kema dans le cadre des exigeances basées sur la CEI 60056 (norme CEI pour disjoncteurs) seront également exposés.

La solution présentée dans l'article propose une solution compacte, sécurisante et peu coûteuse pour la connexion et la protection de transformateurs de puissance et des nouveaux boucles dans un réseau de distribution existant.

UPGRADING OF COMPACT LOAD BREAK SWITCHES TO A CIRCUIT BREAKER FUNCTION.

A.R.A. Pikkert, G.C. Schoonenberg, P.R. Voulon

Holec Medium Voltage The Netherlands

SUMMARY

A cost effective new component especially for existing 12kV distribution networks equipped with Magnefix type switchgear is discussed. After summarising the present situation in The Netherlands, it is shown that the availability of electricity can be much improved by applying the described component, a smart combination of existing single pole hard gas load-break switch-disconnectors and a new design of a three pole vacuum circuit breaker including protection system. (Fig.1). The network improvement, the limitation of costs and the needed space have led to the described design. The combination is tested according to the relevant IEC standards.

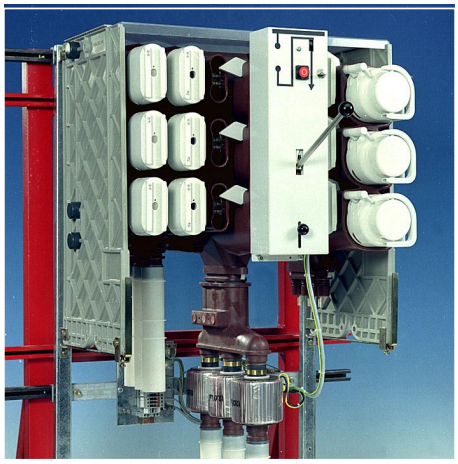

Fig.1: Magnefix system with new protected feeder unit.

INTRODUCTION

Social developments tend more and more to lean towards an increasing dependence on a high quality electricity supply. This high quality has always been a point of major interest in The Netherlands. Over the years 1995 to 1999, it appears that faults in the MV network (3-25 kV) are the cause of more than 65% of the approx. 26 annual outage minutes for an average LV customer in The Netherlands; More than 80% of these MV faults are created in cables, sleeves or connections. [1]. The developments on the electricity market lead to more competition, reduced costs, accountability for non delivered kW's and kWh's, less maintenance, better customer orientation and satisfaction etc. Therefore it is a challenge to improve even more the quality, but at minimum extra costs. As a manufacturer of MV switchgear, Holec plays an active role with its studies about possibilities for decreasing the annual outage minutes, as it is mainly a MV-matter. Several possible solutions have already been proposed [2,3]. In this paper a very cost effective circuit breaker function in combination with a switch-disconnector for the MV network is discussed. The development of the new module is based upon the needs of one of the major Electricity Distribution Companies in The Netherlands (NUON) for the integration of new subring cables in existing network area's and the connection of extra critical customers with additional demands.

MAGNEFIX, AN INSULATION ENCLOSED SWITCHGEAR SYSTEM

In The Netherlands and in many other countries, extensive experience is gained over a period of more than forty years with the application of insulation-enclosed MV switchgear type Magnefix for 12 kV. (Fig.2). This experience covers both switches and switch-fuse combinations of compact Ring Main Units. The insulation enclosures concerned are cast with epoxy resin. The basic concept and shape of Magnefix i.e. modular built, extreme compactness, and magnetic fixation of the moving contacts was well received by the market. Backgrounds of designs with solid insulation are described in ref. [4].

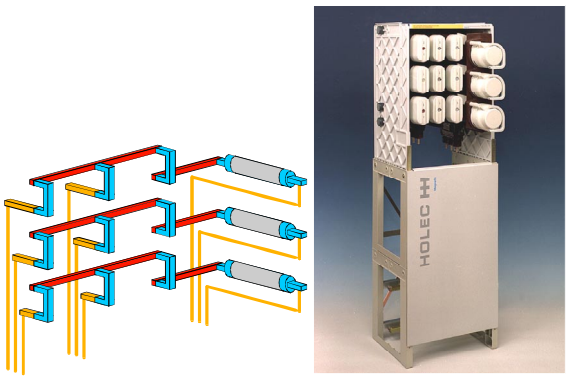

Fig.2: The Magnefix MV switchgear system

To achieve a simple and compact design, it was decided at the time that switching of the three phase system should be realised by means of manual single phase operation. Consequently, the design of the mechanical part could

also be made simple, which resulted in the additional advantages of minimum maintenance and less chance on breakdowns. The switching mechanisms of Magnefix comprise a separate single operating handle that combines with the switch caps in which the moving parts are integrated. An ingenious combination of springs, ridges and magnets guarantees a quick making and breaking movement which is independent of human strength. A double breaking gap is achieved for each phase. Due to the single phase embedding with epoxy resin complete isolation of each phase has been achieved.

NEW ASPECTS OF MEDIUM VOLTAGE NETWORKS IN THE NETHERLANDS

Due to the today's liberalisation there is a clear trend to use the network capacity to its limits with minimum investments, which is in contradiction with the demands for power quality (e.g. short outage time).
The new aspects for the networks are furthermore defined as follows:

- Increasing the load on the electricity grid.
- Minimised lifetime costs of the installed base, low maintenance or, even better, maintenance free designs, e.g. as possible with vacuum circuit breakers.
- Quick handling of network fault repair, remote tripping facility for better network control.
- Optimal selectivity design of the whole network, three pole tripping on faults.
- Minimum space requirements, compact design of transformer stations.
- Using existing housings at retrofit as much as possible
- Environmental friendly design of the widely used components like the MV switchgear, green and clean (easy handling at end of life) design.
- Replacement of the relatively bulky and expensive HV fuse by a circuit breaker (CB) to protect the transformer. This has several advantages, e.g. no costs for maintenance and replacement and keeping various types of fuses on stock, see ref. [3,5].
- Possibility for modifications (upgrading) in future to fulfil the actual specifications needed.

Now to date it is often encountered in The Netherlands that a ring is opened for implementation of another subring, e.g. for energising a newly developed industrial area. As a result of the many digging activities in the new area's the chance on electricity outage is increased for the originally connected customers.
The improvements in the network are however bound to be strictly within the given budgets for assets improvements. The new demands for selectivity are based upon the use of sophisticated protection settings with electronic relays, compared to the normally used standard fuse protection. These economical and technical factors are the main reasons for combining the advantages of the cost effective and compact Magnefix type switchgear with the latest developments in vacuum circuit breaker designs. In figure 3, the situation in the MV networks is shown.

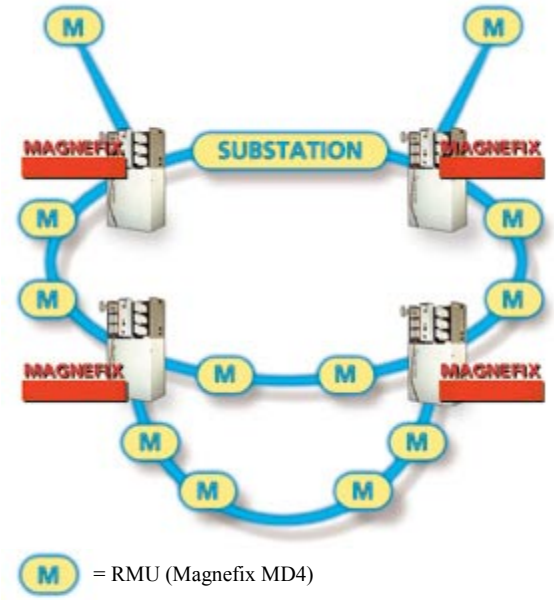

fig.3: Situation of the MV network with subrings and main customer connections.

INCREASING THE AVAILABILTY OF A MEDIUM VOLTAGE NETWORK

The distribution network is principally ring shaped, and operated radial in open rings. This creates a (n-1) redundancy in the structure, but not in the operation mode. At the beginning of the open ring, a circuit breaker is placed in the feeding substation.
A cable fault in such a system leads to an interruption of the supply which can only be restored after a number of (manual) switching operations.
From the possible solutions to increase the availability already mentioned [2,3], here the consequences of adding a circuit breaker in the string is explained.

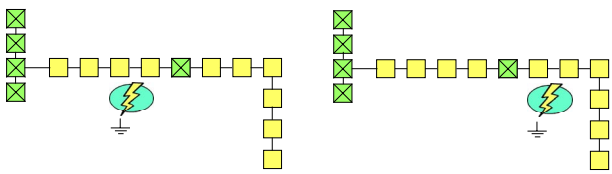

fig.4: Fault upstream versus fault downstream of added circuit breaker in the middle of a MV-string

In fig.4, a circuit breaker is added halfway the MV-string; there will only be positive impact when a fault occurs downstream of the breaker. When an uniform distribution of chances on faults and also of density of users etc. is

supposed, the introduction of the circuit breaker will lead to an average decrease of outage time in the MV string to 75%. Adding a circuit breaker can be especially advantageous if the biggest loads are close to the substation, and with relatively long strings.

DESIGN AND CONSTRUCTION

1. Hardware

The new protected feeder unit (Fig 5) has to fit within the Magnefix product family and therefore complies with the following specifications:

- epoxy resin insulated
- vacuum interrupter (make Holec)
- compact modular design
- stand alone, 3 pole operated tripping mechanism in combination with autonomous operated electronic protection system
- mechanical interlock
- low maintenance mechanism
- switching and earthing procedure identical to existing procedures
- environmentally sound design

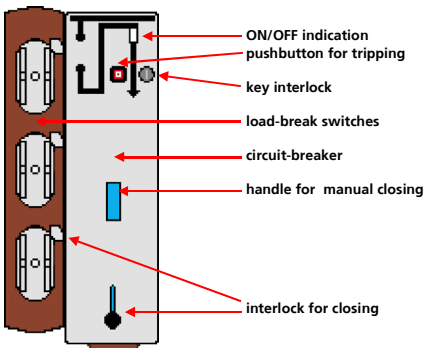

Fig 5: The protected feeder unit.

Fixed part. An existing mould of a Magnefix fuse unit is used as a basis for design. The modular design is maintained as the outside dimensions and especially the panel width are the same. Due to this, existing switchgears can easily be exchanged without need for any rebuilding.
The protected feeder is a stand alone unit however it still needs energy for the protection relay and tripping mechanism. This energy is derived from the primary current through three CT's (directly mounted on the casting) so no auxiliary voltage supply is needed. In order to fit the CT's at the phase terminals, the phase distance between the connecting points is slightly increased.
For integration of the vacuum interrupters modification of the fuseholder mould is needed.

Mechanism. The protected feeder is a combination of a switch-disconnector in series with a three pole vacuum circuit breaker (VCB). The operating mechanism of this VCB is mechanically interlocked with the three single pole switch caps of the branch unit with switch-disconnectors. This guarantees safe operation.
The mechanism is spring charged manually at closing. The stored energy in the springs ensures the opening of the breaker contacts when tripped by the protection relay. The maximum available space for the mechanism is restricted to the depth of the fuse holder cap. This to guarantee application of protected feeders in compact substations. Special care is taken of the design and specific parts to create a mechanism which needs hardly any maintenance. (Fig 1,5).

2. Operating the switchgear

Operation. Since operators in The Netherlands and many other countries are generally familiar with the Magnefix operating philosophy, the new unit must fit within this existing philosophy. Safety and operating procedures for working on power cables connected to a cable feeder and protected feeder are in principal the same.

Switching. Switching ON and OFF, by means of inserting and removing switch caps, is identical to e.g. a cable feeder: single phase manual closing and opening. Prior to switching on by means of the switch caps the VCB must be closed. A mechanical interlock prevents the operator from doing incorrect switching operations. The protected feeder can be 3-pole switched off electrically on overload and short circuit currents. The circuit breaker can be switched off manually as well with a mechanical pushbutton on the front.

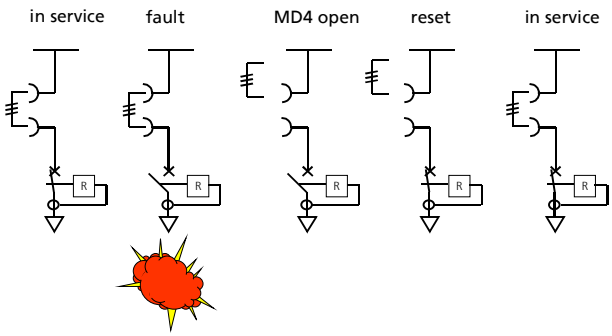

Fig.6: Operating sequences of the system (cable fault).

Earthing. As the protected feeder consists of a series connection with a VCB, earthing is done via this closed VCB. The operating mechanism is equipped with a mechanical and electrical interlock to prevent unauthorised opening when the standard earthing device is installed. After removal of the switch caps the standard earthing device can be used. The procedure described

above is a small addition to the existing operating procedures which remain unchanged.

3. Protection system

The today's protection of the outgoing connection to the network or the power transformer is achieved with a sophisticated electronic protection relay from the KC range of Alstom.
With this relay it is possible to set a wide range of overcurrent and short circuit currents with the appropriate timings. Also, when applicable in certain networks, earthfault protection is possible.
The use of batteries and other means of supplying auxiliary energy is not widely spread in Ring Main Unit locations, so most of the units are lacking from safe secondary power supply. Due to this fact a stand-alone protection unit without the need of auxiliary supply is designed. The energy for metering and tripping is directly derived from the current transformers integrated in the module.

THE CERTIFICATION PROCEDURES

The introduction of the circuit breaker functionality into the existing load break switch-disconnector design leads to a simple, but special philosophy in operation. Especially the fact that closing is performed by the load break switch, and opening is provided by the circuit breaker, is noticeable.
For the testing regime, care is taken for all functionality's included in the combined design.
For setting up the test plan, the following relevant IEC standards (including their amendments till date) are considered:

- **IEC 60466** (1987): A.C. insulation-enclosed switchgear and controlgear for rated voltages above 1 kV and up to and including 38 kV
- **IEC 60694** (1996): common specifications for high-voltage switchgear and controlgear standards
- **IEC 60056** (1987): High-voltage alternating-current circuit breakers
- **IEC 60265-1** (1998): Switches for rated voltages above 1 kV and less than 52 kV
- **IEC 60129**.(1984): Alternating current discon-nectors and earthing switches
- **IEC 60529** (1989) Degrees of protection provided by enclosures (IP code)
- **IEC 61000** Electromagnetic compatibility (EMC))

And also the technical report:

- **IEC 61233** (1994) High-voltage alternating current circuit breakers - inductive load switching

All applicable type tests from the standards are listed in close consultation with the customer (NUON) and the independent test laboratory of Kema in The Nether-lands.
Apart from the certificates already valid for the Magnefix switchgear, the following extra tests are deemed relevant:

- Dielectric tests on main circuits: (IEC 60466, cl. 6.1 and IEC 60694, cl. 6.2)
  - Power frequency 28 kV 1 min.
    (32 kV across isolating distances)
  - Lightning impulse 75 kV, 1.2 / 50 µs
    (85 kV across isolating distances)
  - Partial discharge at 13.2 kV (1.1 Un) < 20 pC
  - Note: The power frequency test 18 kV 1 min. (150% Un) at parts for grade B protection is not applicable for the breaker.
- Dielectric tests on auxiliary and control circuits: (IEC 60694, cl. 6.2.10)
  - Power frequency 2 kV 1 min
- Measurement of the resistance of the main current path and temperature rise tests at 400 A (IEC 60694, cl. 6.4 and 6.5)
- Short-time withstand current and peak withstand current tests: 14.4 kA - 1s; 31 kÂ (IEC 60694, cl. 6.6)
- Breaking tests for the vacuum circuit breaker (making is performed by the Magnefix switch) according to IEC 60056:
  - Test duty 1,2,3 and 4: O - 3 min. - O - 3 min. - O based on 14.4 kA, 12 kV. Note: test duty 5 is not applicable for the breaker (DC <20%)
  - Single phase test: O at 14.4 kA, 7 kV
- Capacitive currents under earth fault conditions (IEC 60265, cl. 6a and 6b)
  - 10 * O at 500 A and 10*O at 800 A, 12 kV (earth fault at downstream-side of breaker)
  - 10 * O at 25*√3 at 12 kV (earth fault at up-stream side of breaker)
- Transformer no-load tests (IEC 61233, cl. 2.3)
  - Oil-filled transformer 630 kVA at 12 kV, cable lengths between breaker and transformer:1.0, 3.8, and 100 m screened and unscreened cable. Purpose of this test is to demonstrate that overvoltages at breaking transformer no-load currents will be very low
- Degree of protection (IEC 60529 cl. 5) IP2X, quantified by the switching caps of the combination.
- Mechanical tests (IEC 60265-1, cl. 6.102): 1000 times no-load, both switch-disconnector as CB (reason is that they always are operated in conjunction)

All the necessary tests are completed successfully, proving the validity of the specifications.

EXPERIENCES

Many Magnefix type switchgears with the new protected feeders are installed up to the present. The NUON company started with a project of 10 protected feeder units for wind mill connections at the island of Pampus in The Netherlands. Protected feeders are also commonly used both for sub ring connections and switching and protecting of large power transformers. Furthermore the units are successfully applied in GSM network substations and various other applications.

Fig 7: Application at NUON

CONCLUSIONS:

Market driven changes result in higher power quality demands, against low initial investments and minimum extra lifetime costs of the equipment.

- Integrating subring cable connections and increasing network functionality in existing networks can be done at low costs.
- a significant increase in availability in the network system can be achieved.
- Upgrading the proven technology of the Magnefix design is very economical.
- The combination of single pole closing and earthing with three pole tripping is safe, practical and according to the relevant IEC standards, where applicable.

REFERENCES:

[1] Bloemhorst, G.A., W.T.J. Hulshorst, Kema report 98410228-TDP 00-13661A, "Reliability of the electricity supply in The Netherlands in 1999", in Dutch, August 2000

[2] Schoonenberg G.C., W.M.M. Menheere. and F. Jansen, "Increasing the availabilty of the medium voltage network in The Netherlands", in Proceedings Cired Conference, Birmingham, june 1997. paper 4.2

[3] Schoonenberg G.C., A.R.A. Pikkert, F. van Overbeeke, C. Spoorenberg, "Future concepts for medium voltage distribution networks: a new philosophy", in Proceedings Cired Conference, Nice, june 1999. paper 5.2

[4] Menheere, W.M.M., B. Noordhuis, "Safety and reliability of medium voltage switchgear with solid insulation of present day and future design". in Proceedings 3rd IEE Conference on Future trends in distribution switchgear, London, april 1990. Publication 318.
Code IECPB4 ISSN:0537-9987. P65-69

[5] Blower, R.W. e.a., "Trends in distribution transformer protection", in Proceedings 3rd IEE Conference on Future trends in distribution switchgear, London, april 1990. Publication 318.
Coden: IECPB4 ISSN:0537-9987. P7-11

[6] Leusenkamp, M.B.J., J.H.L.A. Hilderink and K.Lenstra, " Field calculations on epoxy resin insulated vacuum interrupters," in *Proc. 17th ISDEIV*, Berkeley, California, July 21-26, 1996, vol.2, pp. 1065-1069.