INTERMITTENT EARTH FAULTS - NEED TO IMPROVE THE EXISTING FEEDER EARTH FAULT PROTECTION SCHEMES?

Janne Altonen[1], Olavi Mäkinen[2], Kimmo Kauhaniemi[3], Kent Persson[4]
[1]ABB Oy - Finland, [2]Vaasa Polytechnic - Finland, [3]University of Vaasa - Finland, [4]Fortum Distribution - Sweden
janne.altonen@fi.abb.com, olavi.makinen@puv.fi, kimmo.kauhaniemi@uwasa.fi, kent.persson@fortum.com

INTRODUCTION

This paper discusses the protection problems caused by a special type of fault - the intermittent earth fault. Basic problems related to the performance of the existing protection schemes are presented as well as new, more sophisticated detection methods against intermittent earth faults. At first the characteristics of intermittent earth fault are introduced from theoretical point of view applying also some very advanced simulations. In order to verify the validity of the simulations and the new methods developed key results from extensive field measurements and relay tests made in practical utility network are briefly introduced.

PROBLEM FORMULATION

Intermittent earth fault is a special type of fault that is encountered especially in compensated networks with underground cables. This kind of fault tend to be difficult for conventional directional earth fault protection relays (DE/F-relays) to detect due to highly irregular wave shape of residual current. Whereas residual overvoltage relays (RO/V-relays) used typically as a substation back-up protection have better chances for fault detection because of more steady behaviour of residual voltage. Due to this fact intermittent earth faults can often cause non-selective tripping of the substation back-up protection and eventually an outage with substantial costs to unnecessary wide area. Figure 1 shows typical earth fault protection scheme of a MV substation.

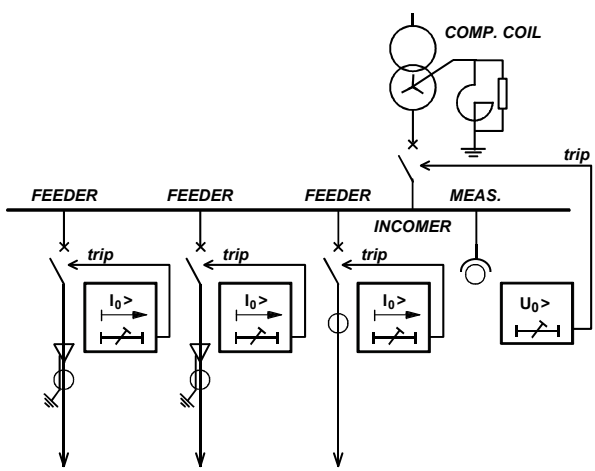

Figure 1. Conventional earth fault protection scheme of a typical MV substation. DE/F-and RO/V-relays operate time selectively

The above problem can, however, be solved by developing more sophisticated protection methods. The starting point for the development work is to understand the electrical characteristics of the intermittent earth fault through theoretical studies, simulations and field-tests. The basic protection algorithms are currently implemented in modern numerical feeder terminals, and practical experience about the protection performance has been obtained through wide field testing. The results obtained so far look very promising in sense of dependability and security of earth fault protection.

WHAT IS AN INTERMITTENT EARTH FAULT?

Intermittent earth fault can be characterised as a series of cable insulation breakdowns because of reduced voltage withstand of it. The fault is initiated as the phase-to-earth voltage exceeds the reduced insulation level of the fault point and extinguishes mostly itself as soon as the fault current crosses zero for the first time (figure 2).

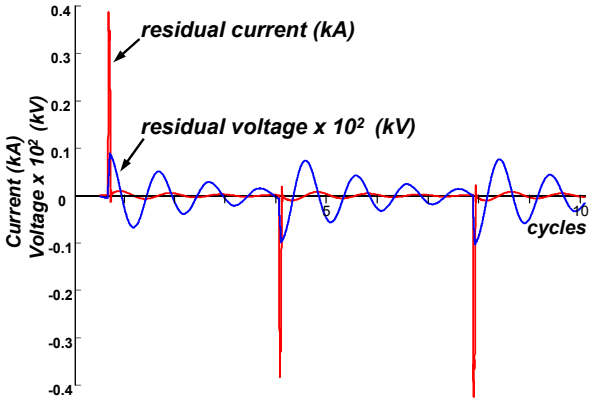

Figure 2. Typical waveforms of residual current and voltage measured from a substation during an intermittent earth fault

The insulation deterioration leading to the breakdown typically requires a long time to develop. Impurities and moist resulting from chemical reactions related to the insulation material ageing processes and also possible impurities originating from the cable manufacturing process itself can set the way for near future insulation damage. In addition, mechanical stress or partial damage of the insulation layer together with penetration of water or moist can launch the deterioration unless an instant breakdown resulting to ordinary earth fault would occur in the first place.

The deterioration eventually leads to occurrence of partial discharges in microscopic impurity voids together with generation and propagation of tree-like cavities inside the insulation material. With XLPE-cables this process is known as 'water-treeing' [1]. This cable type has also been proven to be

susceptible for insulation deterioration of described type when exposed to certain chemicals instead of water together with AC-electric field. In the end, the continuous deterioration reduces the cable insulation capability up to a point causing the breakdown.

Despite of various rather complicated processes leading to the insulation breakdown, and eventually to the likely occurrence of an intermittent earth fault, the resulting fault pattern is usually very same alike. This fault pattern and the overall nature of the electrical characteristics of the intermittent fault can be best described by forming a simplified equivalent circuit of the network involved, and by modelling the fault point as a non-linear resistor and 'a spark gap' with certain type of characteristic current-voltage curve. Figure 3 shows an example of this. Due to random nature of the insulation breakdown voltage level of the fault point, random variation of the threshold voltage should be included in the equivalent circuit model.

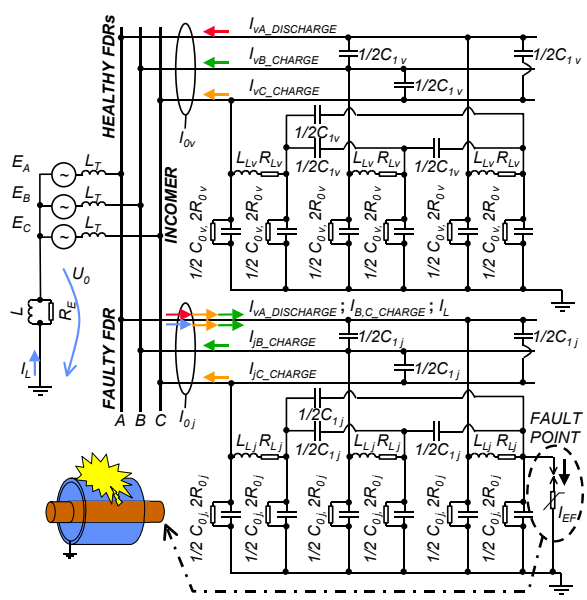

Figure 3. Simplified equivalent circuit model of the network during an intermittent earth fault. Indices _j and _v stand for faulty and healthy feeders respectively

In the circuit model the network feeders have been modelled as pi-section equivalents and the primary transformer is represented by voltage sources and reactances.

Fault initiation by insulation breakdown

When an earth fault occurs, for example, in phase A, the phase-to-earth voltage becomes shorted by the fault. The energy stored in the phase-to-earth capacitance of the faulty phase discharges and this discharge current transient can be measured in the faulty phase of any feeder of the substation (e.g. $I_{vA\_DISCHARGE}$, figure 3).

It can be further concluded that because the healthy phase-to-earth voltages increase during the fault, the phase-to-earth capacitances of the healthy phases are initially charged by a transient called the charge current transient. The total charge current transient of the whole network flows in the faulty phase of the faulty feeder (I_{B,C_CHARGE}, figure 3). The healthy phases of the healthy feeders experience only a part of the total charge current being proportional to the respective portion of the total phase-to-earth capacitance (I_{vB_CHARGE} and I_{vC_CHARGE}, figure 3).

The residual current transient that can be measured in the beginning of the healthy feeders (I_{0v}, figure 3) is a sum of charge and discharge current transients generated in each feeder ($I_{vA\_DISCHARGE}$, I_{vB_CHARGE} and I_{vC_CHARGE}, figure 3). Whereas the residual current transient that can be measured in the beginning of the faulty feeder (I_{0j}, figure 3) is a sum of charge and discharge current transients of the healthy feeders and the coil transient ($I_{vA\_DISCHARGE}$, I_{vB_CHARGE}, I_{vC_CHARGE} and I_L, figure 3). Moreover, it should be noted that the polarities of I_{0j} and I_{0v} are opposite to each other.

The frequency of the charge transient is typically between 200 Hz and 1000 Hz. The frequency of the discharge transient is generally much higher, practical values being 4-20 times the frequency of the charge transient. Because of the high frequency the impedance of the compensation coil is also high, which means that the transient of the earth fault current is pretty much unaffected by the reactance magnitude of the compensation coil (i.e. the degree of compensation).

Figures 4 and 5 show simulated example current and voltage waveforms when the fault is extinguished in the third zero crossing of the fault current charge component.

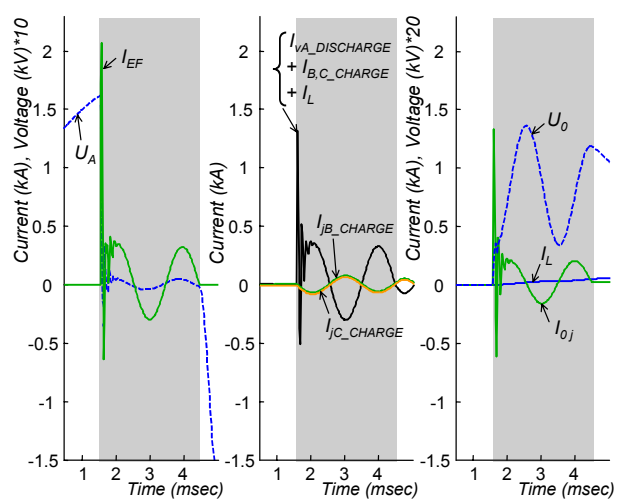

Figure 4. Simulated example waveforms of earth fault current and phase-to-earth voltage at the fault point (left), phase currents of the faulty feeder (middle) and residual current and voltage of the faulty feeder. The shaded area represents the fault duration

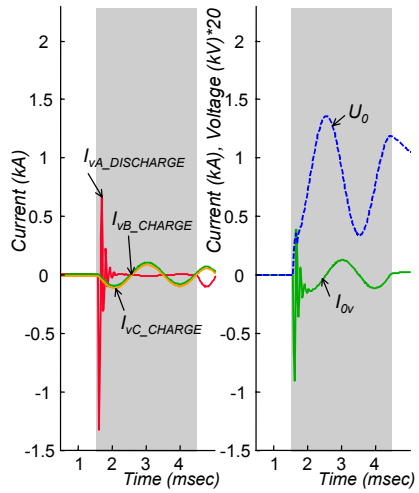

Figure 5. Simulated example waveforms of phase currents of the healthy feeder (left), and residual current and voltage of the healthy feeder (right). The shaded area represents the fault duration

Voltage recovery after fault extinguishing

After the fault current has self-extinguished in one of the succeeding zero crossings, the phase-to-earth voltage of the faulty phase starts to recover and the residual voltage to decay until the next fault initiation occurs. The recovery voltage, which is a sum of the normal phase-to-earth voltage and the residual voltage, can be approximated according to the equation [2]

$$u_{\mathrm{PR}} = \hat{u}_{\mathrm{P}}\cos(\omega t + \varphi) - \hat{u}_0 e^{-t/\tau}\cos(\omega_{\mathrm{U}} t + \varphi) \qquad (1)$$

where

u_{PR} = Recovery voltage

$\hat{u}_{\mathrm{P}}$ = Peak value of the phase-to-earth voltage

$\hat{u}_0$ = Peak value of the residual voltage

φ = Phase angle of the phase-to-earth voltage at the fault current interruption

τ = Time constant of the residual voltage decay

ω_{U} = Resonance angular frequency of the zero sequence subsystem

ω = Rated angular frequency.

The time constant for the residual voltage is obtained from the equation [2]

$$\tau = \frac{2I_{\mathrm{C}}}{\omega I_{\mathrm{P}}} \qquad (2)$$

where

I_{P} = Total resistive earth fault current of the network

I_{C} = Total capacitive earth fault current of the network.

Finally, the resonance frequency of the zero sequence system can be calculated from the equation [2]

$$\omega_{\mathrm{U}} = 2\pi f_{\mathrm{n}}\sqrt{K - \frac{I_{\mathrm{P}}^2}{4I_{\mathrm{C}}^2}} \qquad (3)$$

where

K = Degree of compensation

f_{n} = Rated frequency.

An example of the application of equation 1 can be seen in figure 6, where the instant of fault current interruption corresponds to φ=30°. In this case the fault has self-extinguished at t=0 sec and no re-initiation of the fault occurs.

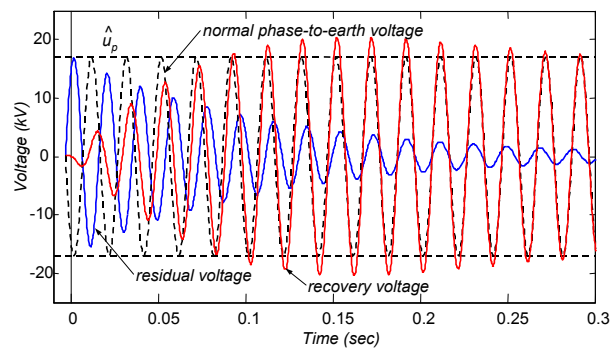

Figure 6. Simulated voltage recovery of phase A after the fault current interruption (t=0 sec)

The equations are useful when estimating the maximum time interval for the next expected fault initiation to take place if an assumption for the breakdown voltage level has first been made. As an example the peak values of the expected recovery voltage after the fault current interruption have been evaluated in figure 7.

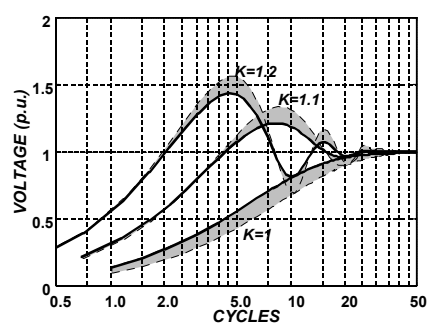

Figure 7. Recovery voltage peak values for a network where I_{P}=(0.02*abs(I_{C})+2)A with different degrees of compensation K. The shading shows the effect of doubling the galvanic size of the network (I_{C} -> 2I_{C})

WHY CONVENTIONAL EARTH FAULT RELAYING DOES NOT WORK PROPERLY?

Conventional DE/F- and RO/V-relays have been designed to operate with more or less steady–state fundamental frequency current and voltage sine-waves. It is therefore evident that problems arise when the current and voltage waveforms are highly irregular.

The possible basic problem is easily explained by the aid of figure 8, where the behaviour of these relays is investigated in the form of timing graph. The DE/F-relay, if eventually being started, resets its timer in the meantime of the fault pulses. Whereas, the operate timer of the RO/V-relay keeps running and eventually operates. With some DE/F-relay types the start may be difficult to be obtained due to narrowness of the fault pulses. The detection depends greatly on the input filtering, sampling frequency and also on the length of the minimum starting time. The characteristics of the filtering define the final 'shape' of the current and voltage waveforms seen by the relay. Sampling frequency mainly affects the amplitude of the fault current pulses seen by the relay. Too long starting time specified for the relay may cause the start not to be initiated at all.

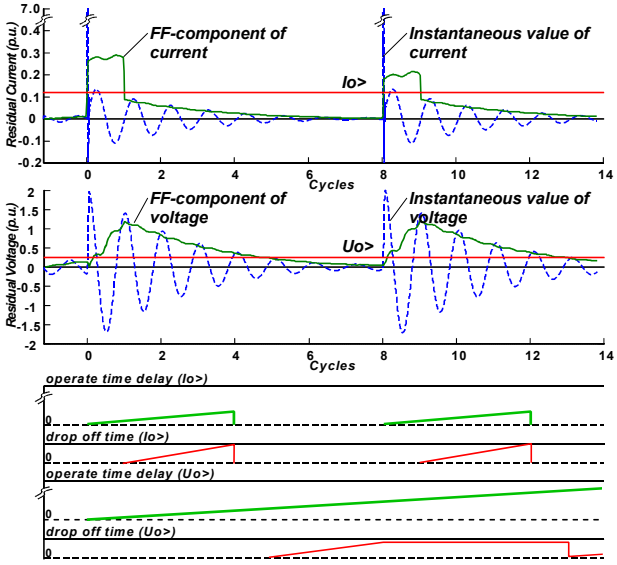

Figure 8. Starting and resetting of a DE/F- and RO/V-relay with uncoordinated drop-off times, where intermittent earth fault leads to unselective operation of back-up protection. It has been assumed that at the same time the residual current exceeds the setting the phase angle of it lies within the operating sector. FF = fundamental frequency

The phase angle difference between the fundamental frequency residual current and voltage phasors associated to the operating sector of the protection has also a paramount effect on the performance of the directional protection. From the faulty feeder point of view it should be considered how well the phase angle of the residual current goes inside the operating sector to guarantee the dependability of protection. Whereas from the healthy feeder point of view the question is how well the phase angle of the residual current goes outside the operating sector to guarantee the security of protection.

These viewpoints are investigated in figure 9, where residual current/phase angle trajectory has been plotted during a single fault pulse related to an intermittent earth fault. Like in the example case it is possible that the phase angle difference exceeds the negative limit of the operating sector making it even more difficult for the relay of the faulty feeder to start.

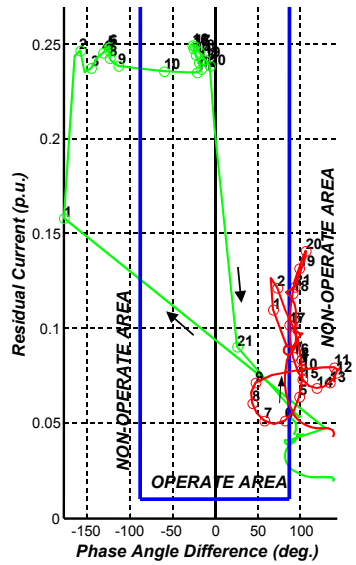

Figure 9. Residual current/phase angle trajectory seen by a DE/F-relay during a single fault pulse of an intermittent earth fault in relation to the conventional operating sector of the protection. Green = faulty feeder, red = healthy feeder, indices 1 and 20 indicate the start and interruption of the fault correspondingly

On the other hand the phase angle difference of the healthy feeder can cross momentarily the operating sector during the fault pulse itself or right after the fault current has been interrupted due to self-extinguishing or tripping of the faulty feeder CB. If this is enough to start the protection, it may even result to a false trip depending on the selected drop-off time and operate time delay.

BASIC DETECTION METHODS

It is evident from above that dedicated functionality against intermittent earth faults is needed. Bearing this in mind algorithms have been developed and implemented in modern feeder terminals. The basic detection methods at the moment are based on spike detection with certain polarity and phase angle criterion methods.

Spike detection method

Figure 10 shows typical residual current waveforms measured from both faulty (blue) and healthy (red) feeder. The operation of the protection is based on detection of residual current spikes of appropriate polarity. Counter functions have been added in order to minimise the risk of false operation. With settable drop-off timer feature the resetting of the operating timer between the fault pulses is prevented and the operation of the protection in due time is ensured.

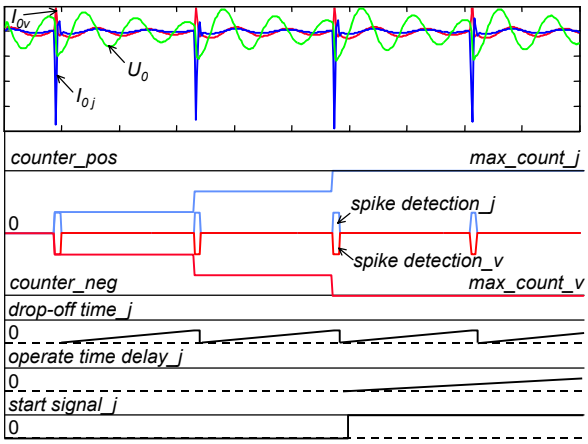

Figure 10. Filtered and sampled residual current and voltage signals (top) in relation to the principal operation of the spike detection method (bottom). Indices _j and _v stand for faulty and healthy feeders respectively

Phase angle criterion

Figure 11 shows the phase angle difference between the residual current and voltage phasors measured from both faulty (blue) and healthy (red) feeder. The protection starts if the calculated phase angle difference is inside the defined operating sector and in the same time the residual current and voltage amplitudes are above the set values.

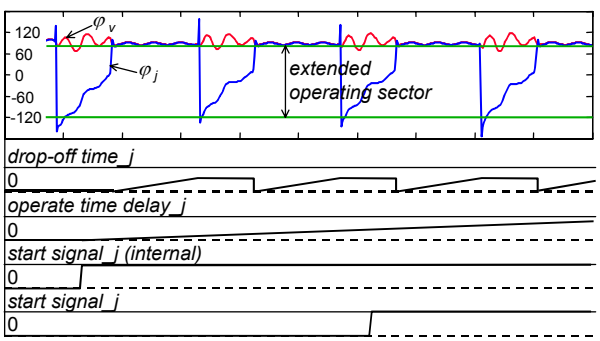

Figure 11. Phase angle difference between filtered and sampled residual current and voltage signals (top) in relation to the principal operation of the phase angle criterion method (bottom). Indices _j and _v stand for faulty and healthy feeders respectively

The performance of this method can be further trimmed by applying frequency adaptive phasor calculation and extended operating sector. Frequency adaptive phasor calculation improves mainly the accuracy of the phasor estimation between the fault pulses, and finally by the use of the extended operating sector a correct directional sensing of the protection is ensured. This way selective operation can be ensured in various network conditions and degrees of compensation. In addition, this method includes also the settable drop-off timer feature.

EXPERIENCES GAINED FROM FIELD TESTS

Variety of field tests has been performed in practical utility networks. The range of the network parameters was the following:

- Capacitive earth fault current 60 – 140 A
- Degree of compensation 0.5 – 1.3
- Current rating of the earthing resistor in parallel of the coil 2, 10 or 20 A
- Fault distance from the station 20 – 400 m.

The fault point was arranged in one of the feeders by drilling a hole through the cable insulation layer and filling it by water. After this the cable was energised. Figure 12 shows the moment of the fault ignition.

Figure 12. Artificial ignition of an intermittent earth fault in field tests

Figure 13 shows principal test arrangement in one of the substations. Different feeder terminal types have been designated as R1 and R2. In addition to the standard earth fault protection functionality both terminal types featured also the intermittent earth fault function. Feeder terminal R2 applies spike detection method and R1 phase angle criterion. By oscilloscope the primary signals together with the feeder terminal operation signals were recorded. The sampling frequency of 50 kHz enabled that also the discharge transients could be recorded accurately.

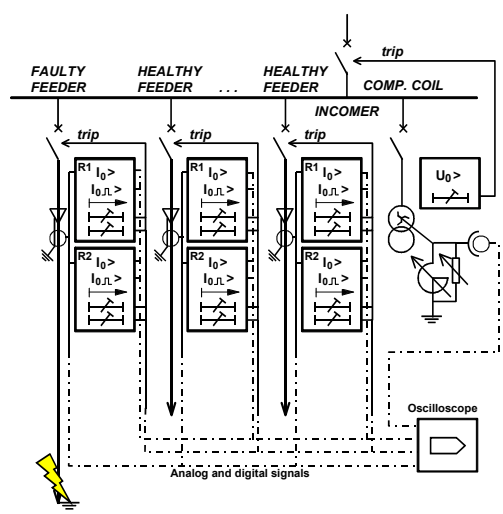

Figure 13. Principal field test arrangement. R1 and R2 designate different feeder terminal types

Figure 14 shows an example of one of the recordings. It can be seen that because the average voltage withstand of the fault point in this case was only about 2.8 kV, the time interval between the fault pulses became relatively short.

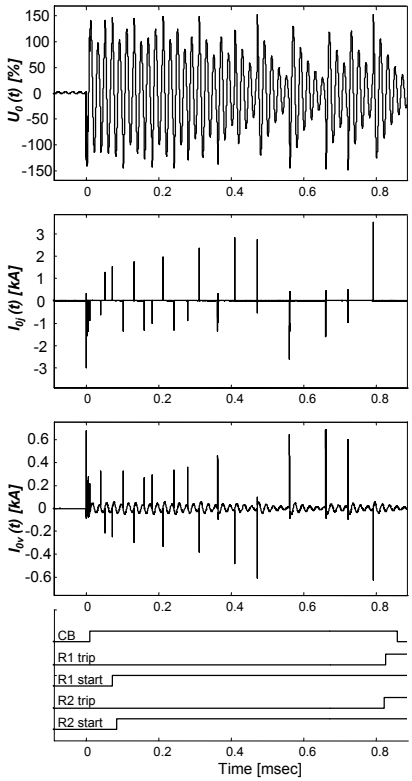

Figure 14. Actual residual voltage and current signals derived from a sample of field tests (rows 1-3) in relation to actual feeder terminal response of the faulty feeder (row 4). Indices _j and _v stand for faulty and healthy feeders respectively

The general result from the tests was that in the faulty feeder both detection methods gave out the trip signals correctly. A few times in a healthy feeder the standard earth fault function and a couple of times the intermittent earth fault function applying phase angle criterion gave out false starting signal, but did not trip, especially when the network was heavily under or overcompensated and the feeder in question had a high capacitive current contribution.

As a few false starts occurred the security of the protection still needs to be improved. False starts of the standard earth fault protection function could be avoided by choosing the start time and the drop-off time properly. To avoid false starts of the intermittent earth fault function, the shape of the operating sector could still be reduced in the positive side in order to get more margin to actual fault area. Thus an intermittent earth fault function which applies phase angle criterion only in the negative side and e.g. I×cos(φ) criterion in the positive side of the operating sector could be one possible solution.

Another important point is the concept of operating time. It should be pointed out that the accuracy of the operating time is not necessarily very good, which is affected by the applied detection method. With spike detection method the start of the function is always delayed by the time of three spikes. The time interval between the spikes dictates the length of the additional delay. This delay could be longer, if the fault is not extinguished in the first zero crossing possibly resulting to both positive and negative spikes. Also non-detection of some of the positive spikes under certain conditions may delay the operation even more. The risk for this may exist if the network is heavily under or overcompensated. With phase angle criterion method the operating time can be defined more accurately. The additional time delay that should be considered here equals to the length of the set drop-off time provided that the function is started by the first spike occurrence.

CONCLUSIONS

Characteristics of intermittent earth faults have been investigated by theoretical studies, simulations and field tests. The created simulation models were fine-tuned by the aid of field tests in practical utility networks. The correspondence between the simulation and field test results was proven to be so good that also simulation results could be used in algorithm design and testing. In this way it became possible to test the effect of the variation in network parameters on the algorithm response much more widely than it would be by using field test results only.

Having the knowledge above intermittent earth fault detection algorithms were designed and implemented in modern feeder terminals. Basic implementations are based either on the spike detection method or on the phase angle criterion. Both methods performed dependably in the field tests i.e. gave out tripping signals correctly in the faulty feeder, whereas it showed that the overall security of the earth fault protection still needs to be somewhat trimmed, because false starts, although only few of them, occurred. Also the detection algorithms themselves will be subject to constant development work. Finally it should be noted that the operating requirements of intermittent and standard earth fault functions are basically quite different. The start of the intermittent earth fault function should be fast and sensitive enough to detect the narrow fault pulses, and the drop-off time long enough not to reset between the fault pulses. For the standard earth fault function longer starting time and shorter drop-off time could be applied. The essential guideline for achieving as good security and dependability of earth fault protection as possible is to implement separate and dedicated functions against intermittent and standard earth faults to feeder terminals of each substation where intermittent earth faults can be expected.

REFERENCES

[1] T. Uematsu, 1992, "Historical Review of Water Trees in XLPE Cables", *Furukawa Review*, No. 10, Aug. 1992, 31 – 48

[2] O. Mäkinen, 2001, *Keskijänniteverkon katkeileva maasulku ja relesuojaus (Intermittent earth fault and relay protection in medium voltage network),* Licentiate thesis, Tampere University of Technology, 107 p. (In Finnish)