POWER SYSTEM OPERATION AND CONTROL USING FACT DEVICES

Bhanu CHENNAPRAGADA Venkata Krishna
GVPcollege of Engineering ,
Visakhapatnam-INDIA .
bhanucvk@hotmail.com

KOTAMARTI. S. B. Sankar
GVPCollege of Engineering ,
Visakhapatnam-INDIA .
sankar_eee@yahoo.co.in

PINDIPROLU. V. Haranath
GVPCollege of Engineering,
Visakhapatnam-INDIA.
haranath_pv@yahoo.com

ABSTRACT

Flexible alternating current transmission systems(FACTS) technology opens up new opportunities for controlling power and enhancing the usable capacity of present, as well as new and upgraded lines. The Unified Power Flow Controller(UPFC) is a second generation FACTS device, which enables independent control of active and reactive power besides improving reliability and quality of the supply. This paper describes the basic principle of operation of UPFC, its advantages and to compare its performance with the various FACTS equipment available.

INTRODUCTION

The electric power system is never at its equilibrium. The main objective of the power system operation is to match supply/demand, provide compensation for transmission loss, voltage and frequency regulation, reliability provision etc. The operation of a power system can be classified according to the following tasks:

- Meet the given predicted time-varying demand at minimum operating cost.
- Compensation of real and reactive power(losses) as the demand is varied.
- Meet various operating constraints such as thermal or stability constraints on transmission lines, voltages at both supply and demand buses.
- Provide stand-by network resources in case any single outage occurs on the system.

The need for more efficient and fast responding electrical systems has given rise to innovative technologies in transmission using solid-state devices. These are called FACTS devices which enhance stability and increase line loadings closer to thermal limits. The development of power semiconductor devices with turn-off capability(GTO, MCT) opens up new perspectives in the development of FACTS devices. FACTS devices are the key to produce electrical energy economically and environmental friendly in future.

FACTS CONTROLLERS

FACTS controllers may be based on thyristor devices with no gate turn-off, or with power devices with gate turn-off capability. FACTS controllers are used for the dynamic control of voltage, impedance and phase angle of high voltage AC transmission lines. FACTS controllers can be divided into four categories:

1. Series controllers.
2. Shunt controllers.
3. Combined series-series controllers.
4. Combined series-shunt controllers.

Series Controllers:

The series controller could be a variable impedance, such as capacitor, reactor, etc., or a power electronic based variable source of main frequency, subsynchronous and harmonic frequencies to serve the desired need. They inject voltage in series with the line. As long as the voltage is in phase quadrature with the line current, the series controller only supplies or consumes variable reactive power. Any other phase relationship will involve handling of real power as well. Static Synchronous Series Compensator(SSSC) is one such series controller.

Shunt Controllers:

Shunt controllers is also a variable impedance, variable source, or a combination of these. All shunt controllers inject current into the system at the point of connection. As long as the injected current is in phase quadrature with the line voltage, the shunt controller only supplies or consumes variable reactive power. Any other phase relationship will involve handling of real power as well. Static Synchronous Compensator(STATCOM) is one such controller.

Combined Series-Series Controllers:

This could be a series combination of separate series controllers, which are controlled in a coordinated manner, in a multilane transmission system. Or it could be a unified controller, in which series controllers provide independent series reactive compensation for each line but also transfer real power among the lines via the power link. Interline Power Flow Controller comes in this category.

Combined Series-Shunt Controllers:

This could be a combination of separate shunt and series controllers, which are controlled in a coordinated manner, or a unified power flow controller with series and shunt elements. In principle, combined shunt and series controllers inject current into the system with shunt part of the controller voltage in series in the line with the series part of the controller. However, when the shunt and series

controllers are unified, there can be a real power exchange between the series and shunt controllers via the power link.

Benefits of utilizing FACTS Controllers:

The benefits of utilizing FACTS devices in electrical transmission systems can be summarized as follows:

- Better utilization of existing transmission system assets.
- Increased transmission system reliability and availability.
- Increased dynamic and transient grid stability and reduction of loop flows.
- Environmental benefits.

UNIFIED POWER FLOW CONTROLLER(UPFC)

The UPFC is the most versatile and complex power electronic equipment that has emerged for the control and optimisation of power flow in electrical power transmission systems. It offers major potential advantages for the static and dynamic operation of transmission lines.

The UPFC was devised for the real-time control and dynamic compensation of ac transmission systems, providing multifunctional flexibility required to solve many of the problems facing the power industry. Within the framework of traditional power transmission concepts, the UPFC is able to control, simultaneously or selectively, all the parameters affecting power flow in the transmission line. Alternatively, it can independently control both the real and reactive power flow in the line unlike all other controllers.

Basic Principle of UPFC

The UPFC consists of two voltage sourced converters, connected back-to-back and are operated from a common dc link provided by a storage capacitor as shown in the fig. I

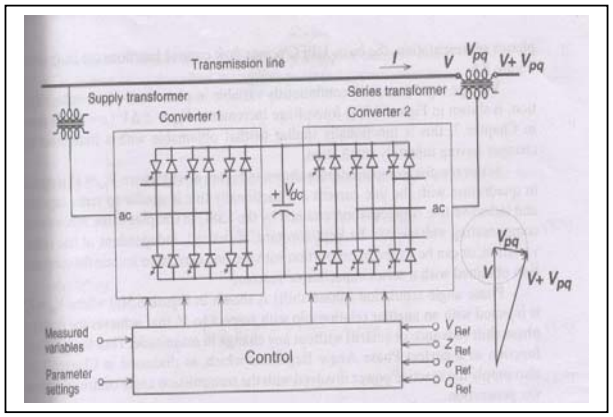

Fig.I Implementation of the UPFC by two back-to-back voltage-sourced converters.

The arrangement shown in the fig. I functions as an ideal ac-to-ac power converter in which the real power can freely flow in either direction between the ac terminals of the two converters, and each converter can independently generate (or absorb) reactive power at its own ac output terminal.

Converter 2 provides the main function of the UPFC by injecting a voltage $\mathbf{V_{pq}}$ with controllable magnitude V_{pq} and phase angle ρ in series with the line via an insertion transformer. This injected voltage acts essentially as a synchronous ac voltage source. The transmission line current flows through this voltage source resulting in reactive and real power exchange between it and the ac system. The reactive power exchanged at the ac terminal is generated internally by the converter. The real power exchanged at the ac terminal is converted into dc power which appears at the dc link as a positive or negative real power demand.

The basic function of converter 1 is to supply or absorb the real power demanded by converter 2 at the common dc link to support the real power exchange resulting from the series voltage injection. This dc link power demand of converter 2 is converted back to ac by converter 1 and coupled to the transmission line bus via a shunt connected transformer. In addition to the real power need of converter 2, converter 1 can also generate or absorb controllable reactive e power, if it is desired, and thereby provide independent shunt reactive compensation for the line. It is important to note that whereas there is a closed direct path for the real power negotiated by the action of reactive power exchanged is supplied or absorbed locally by converter 2 and therefore does not have to be transmitted by the line. Thus, converter 1 can be operated at a unity power factor or be controlled to have a reactive power exchange with the line independent of the reactive power exchanged by converter 2. Obviously, there can be no reactive power flow through the UPFC dc link.

Control Structure of UPFC

The UPFC control system is divided into internal(or converter) control and functional operation control. The internal controls operate the two converters so as to produce the commanded series injected voltage and, simultaneously, draw the desired shunt reactive current. The internal controls provide gating signals to the converter valves so that the converter output voltages will properly respond to the internal reference variables, i_{shpRef}, i_{shqRef}, and v_{pqRef},, in accordance with the basic control structure shown in fig.II. As can b observed, the series converter responds directly and independently to the demand for series voltage vector injection. Changes in series voltage vector, v_{pq} can therefore be affected virtually instantaneously. In contrast, the shunt converter operates under a closed-loop current control structure whereby the shunt real and reactive power components are independently controlled. The shunt reactive power responds directly to an input demand. However, the shunt real power is dictated by another control loop that acts to

maintain a preset voltage level on the dc link, thereby providing the real power supply or sink for the real power ensures the required real power balance between the two converters. The converters do not exchange reactive power through the link.

The external or functional operation control defines the functional operating mode of the UPFC and is responsible for generating the internal references, v_{pqRef} and i_{pqref} for the series and shunt compensation to meet the prevailing demands of the transmission system. The functional operating modes and compensation demands, represented by external (or system) reference inputs, can be set manually by the operator or dictated by an automatic system optimisation control to meet specific operating and contingency requirements.

An overall control structure, showing the internal, the functional operation, and system optimisation controls with the internal and external references is shown in Fig.II.

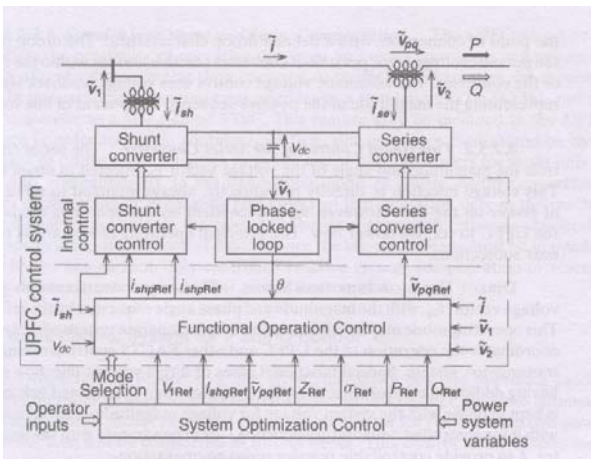

Fig.II Overall UPFC control structure

The capability of unrestricted series voltage injection together with independently controllable reactive power exchange offered by the circuit structure of two back-to-back converters, facilitate several operating and control modes for the UPFC. These include the option of reactive shunt compensation and the free control of series voltage injection according to a prescribed functional approach selected for power flow control. The UPFC circuit structure also allows the total decoupling of the two converters to provide independent reactive shunt compensation(STATCOM) and reactive series compensation (SSSC) without any real power exchange.

Basic Operating Modes of UPFC

I. Shunt converter

The shunt converter is operated so as to draw a controlled current ,$\tilde{i}_{sh}$ from the line. One component of this current ,$\tilde{i}_{shp}$ is automatically determined by the requirement to balance the real power of the series converter. The other component, i_{shq}, is reactive and can be set to any desired reference level(inductive or capacitive) within the capability of the converter. The reactive compensation control modes of the shunt converter are, of course, very similar to those commonly employed for the STATCOM and conventional static var compensator.

Reactive power control mode

In reactive power control mode the reference input is an inductive or capacitive var request. The shunt converter control translates the var reference into a corresponding shunt current request and adjusts the gating of the converter to establish the desired current.

Automatic voltage control mode

In voltage control mode, the shunt converter reactive current is automatically regulated to maintain the transmission line voltage to a reference value at the point of connection, with a defined droop characteristic. The droop factor defines the per unit voltage error per unit of converter reactive current within the current range of the converter. The automatic voltage control uses voltage feedback signals, usually representing the magnitude of the positive sequence component of bus voltage, v_1.

II. Series converter

The series converter controls the magnitude and angle of the voltage vector v_{pq} injected in series with the line. This voltage injection is, directly or indirectly, always intended to influence the flow of power on the line. However, v_{pq} is dependent on the operating mode selected for the UPFC to control power flow. The principal operating modes are as follows:

Direct voltage injection mode

The series converter simply generates the voltage vector, v_{pq}
With the magnitude and phase anlge requested by the reference input. This operating mode may be advantageous when a separate system optimisation control coordinates the operation of the UPFC and other FACTS controllers employed in the transmission system.

Bus voltage regulation and control mode

The injected voltage vector, v_{pq}, is kept in phase with the "input" bus voltage vector v_1 and its magnitude is controlled to maintain the magnitude "output" bus voltage vector v_2 at the given reference value.

Line impedance compensation mode

The magnitude of the injected voltage vector, v_{pq}, is controlled in proportion to the magnitude of the line current, so that the series insertion emulates an impedance when viewed from the line. The desired impedance is

specified by reference input and in general it may be a complex impedance with resistive and reactive components of either polarity. A special case of impedance compensation occurs when the injected voltage is kept in quadrature with respect to line current to emulate purely reactive (capacitve or inductive) compensation.This operating mode may be selected to match existing series capacitive line compensation in the system.

Phase angle regulation mode

The injected voltage vector $\tilde{v}_{pq}$ is controlled with respect to the "input" bus voltage vector $\tilde{\mathbf{v}}_1$ so that the "output" bus voltage vector $\tilde{\mathbf{v}}_2$ is phase shifted , without any magnitude change ,relative to $\tilde{\mathbf{v}}_1$ by an angle specified by the reference input. One special case of phase shifting occurs when $\tilde{\mathbf{v}}_{pq}$ is kept in quadrature with $\tilde{\mathbf{v}}_1$ to emulate the "quadrature booster."

Automatic power flow control mode

The magnitude and phase angle of the injected voltage vector , $\tilde{\mathbf{v}}_{pq}$, is controlled so as to force such a line current vector, $\tilde{\mathbf{i}}$,that results in the desired real and reactive power flow in the line . In automatic power flow control mode , the series injected voltage is determined automatically and continuously by a closed -loop control system to ensure that the desired P and Q are maintained despite power system changes .The transmission line containing the UPFC thus appears to the rest of the power system as a high impedance power source or sink. This operating mode , which is not achievable with conventional line compensating equipment ,has far reaching possibilities for power flow scheduling and management. It can also be applied effectively to handle dynamic system disturbances (eg . to damp power oscillations).

Stand alone shunt and series compensation

The UPFC circuit offers the possibility of operating shunt and series converters independently of each other by disconnecting their common dc terminals and splitting the capacitor bank. In this case, the shunt converter operates as stand alone STATCOM, and the series converter as a stand alone SSSC. This feature may be included in the UPFC structure in order to handle contingencies (eg.one converter failure) and be more adaptable to future system changes (eg.the use of both converters for shunt only or series only compensation).In the stand alone mode, of course, neither converters capable of absorbing or generating real power so that operation only in the reactive power domain is possible. In the case of the series converter this means considerable limitation in the available control modes .Since the injected voltage must be in quadrature with the line current , only controlled reactive voltage compensation or reactive impedance emulation is possible for power flow control.

CONSTRAINTS ON UPFC

Significant increase in power transfer is possible though not without limitations with UPFC. Transient simulation studies show that minimum power transfer limiting condition result in a smooth transition in and out of limits[6]. The amount of increase in power transfer is limited to the MVA rating of the shunt and series inverters. The increasing requirements for shunt reactive power results in a practical limit on the amount of power transfer that can be achieved. When the UPFC is operating below its limits, it provides powerful oscillation damping.

The following are the constraints imposed to the operation of UPFC:

- Series injected voltage magnitude.
- Line current through series inverter.
- Shunt inverter current.
- Minimum line-side voltage of the UPFC.
- Maximum line-side voltage of the UPFC.
- Real power transfer between the series and shunt inverter.

WHY UPFC?

The UPFC is versatile and multifunction power flow controller with capabilities of terminal voltage regulation, series line compensation and phase angle regulation. Besides the above mentioned functions, UPFC has additional features making it very popular among the available FACTS devices.

The following are the additional features UPFCs offer:

Optimal Power Flow

A UPFC can be controlled in a power system to satisfy the following objectives simultaneously[5]

- Regulating power flow through a transmission line(over-load relief, loop-flow minimisation, contractual power fulfilment etc.)
- Minimisation of power losses without generator rescheduling.

Reliability

The load carrying capacity of the system at a given risk level is significantly affected by the employment of the UPFC[7]. This is particularly true at hgh risk levels. The increase in load carrying capacity due to the employent of the UPFC is extremely dependent on the risk criterion. The impact of employing the UPFC is greater using the LOLE criterion than for the UPM or SM. This reduces the customer interruption cost. For a given peak load, the system risk associated with utilizing a TCSC is higher than using a UPFC.

Dynamic Security

For a long time, preventive control has been considered as the only strategy to control dynamic security, since the instability occurs rapidly and no manual intervention is possible after the onset of contingency. Preventive control obtained by rescheduling of active power is generally characterized by a higher production cost than the one obtained by economic dispatch. At this stage of technology, complete automatic corrective control is feasible. In order to implement these remedial actions, fast actuators are needed. UPFC controllers can control the security of the network under large perturbations control actions associated to generation and load[8].

Harmonic Isolator

The UPFC as harmonic isolator uses the series voltage source in another mode. In this mode the voltage harmonics associated with the non-linear load are isolated. The isolating voltage source now prevents the load harmonics from penetrating back into the system onto the voltage receiving bus. This injected voltage source can also be used to isolate incoming network harmonics from penetrating into local harmonic filters and sensitive loads[10].

COMPARISON OF UPFC WITH OTHER FACTS DEVICES

Conventional thyristor-controlled power controllers employ traditional power system compensation and control schemes, in which mechanical switches are replaced by thyristor valves. Each scheme is devised to control a particular system parameter affecting power flow. Thus, Static Var compensators are applied for reactive power and voltage control, controllable series compensators for line impedance adjustment, and tap-changing transformers for phase-shift. Each of these is a custom-designed system with different manufacturing and installation requirements. They have inherent limitations with regard to manufacturing and installation complexity, physical size, and relatively high overall cost. Fig.III shows typical investment costs in US$ per KVAR against the operating range in MVAr.

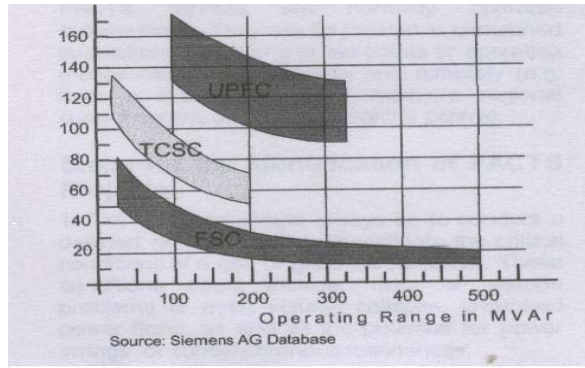

Fig.III Typical investment cost for SC, TCSC and UPFC

The unified power flow controller makes it possible to handle practically all power-flow control and transmission line compensation problems uniformly, using solid-state voltage sources exclusively instead of switched capacitors and reactors, or tap-changing transformers. UPFC minimises real estate and installation labour requirements, and makes the overall capital cost primarily dependent on the cost of the solid-state components, which are decreasing trend with advancement of technology.

The unified power flow controller can simultaneously or selectively provide series impedance compensation and phase angle control. The conventional approach would require two totally different, independent equipments to do that. UPFC internally generates all the of the reactive power required to accomplish the power-flow control by series voltage injection. The conventional phase shifter cannot generate its own reactive power demand; it has to be supplied by the line or as in the case considered, by a separate controllable Var source. It is able to regulate voltage, without additional power hardware, by direct, in-phase voltage injection. The conventional approach would require another set of 'in-phase' transformer windings with an independent thyristor switch arrangement.

The unified power flow controller is based on a single power electronic hardware building block, the voltage-sourced inverter. This inverter can be constructed from standard six-pulse modules, using GTO valves, in a flexible harmonic neutralised structure for virtally any desired rating. The inverter modules can be produced in volume and pretested. The unified power flow controller approach, apart from the coupling transformers, requires no large AC storage components, such as capacitors and reactors. The real estate requirements are therefore low and the installation labour is minimal.

The hardware implementation of each conventional thyristor-controlled power-flow controller is different. Static Var compensators use thyristor-controlled reactors, operated at a relatively low voltage level on the secondary of a coupling transformer. Controllable series capacitive compensators employ functionally similar components in different configurations, which are operated at transmission line potential and therefore located on a high-voltage platform, with control and cooling provided from ground potential. The phase shifter requires a completely different thyristor valve structure and a relatively complex transformer with a number of isolated secondary windings. The hardware for each of these applications is essentially custom designed and built. Owing to the presence of AC storage components and their associated hardware, the

conventional reactive compensators are physically large, requiring considerable real estate and installation labour[4].

CONCLUSIONS

Today, FACTS devices are individually controlled. But according to a new EPRI report, inventive strategies incorporating system-wide control logic could further increase power transfer capability, stability and reliability of transmission systems. Controllers would be able to maximize available transfer capacity which maintaining dynamic stability and security, which could help accommodate even more electricity transactions.

The all solid-state implementation of power-flow controllers will result in a significant reduction in equipment size and installation labour, dramatic improvements in operating flexibility and performance, and a progressive reduction in capital cost that is fuelled by advances in power semiconductor technology. Furthermore, the uniform, all solid-state approach is expected to reduce manufacturing cost and lead-time by allowing the use of standard, prefabricated power inverter modules in different applications. All these will hasten the broad application of the FACTS concepts and the achievement of its ultimate goal, the higher utilisation of electric power systems.

REFERENCES

[1] Douglas J.Gotham and G.T.Heydt, 1998, "Power flow control and power flow studies for systems with FACTS devices", IEEE Transactions on Power Systems, Vol.13, No.1, pp 60 – 65.

[2] C.D.Schauder, D.M.Hamai et al., 1998, "Operation of the Unified Power Flow Controller(UPFC) under practical constraints", IEEE Transactions on Power Delivery, Vol.13, No.2, pp 630 – 637.

[3] K.R.Padiyar and K.Uma Rao, 1999, "Modeling and control of unified power flow controller transient stability", International journal on Electrical Power and Energy Systems. 21(1999) 1 – 11, pp 1-11.

[4] L.Gyugi, 1992, "Unified Power Flow Control concept for flexible AC transmission systems", IEE Proceedings-C 139 pp 323-331.

[5] Andersson, G.; Angquist, L.; Ghandhari, M.; Noroozian, M, 1997, "Use of UPFC for optimal power flow control ", IEEE Transactions on Power Delivery, Volume: 12 Issue: 4 , Page(s): 1629 –1634.

[6] Edris, A.; Gyugyi, L.; Hamai, D.M.; Lund, M.R.; Rietman, T.R.; Schauder, C.D.; Torgerson, D.R, 1998 "Operation of the unified power flow controller (UPFC) under practical constraints",Power Delivery, IEEE Transactions on , Volume: 13 Issue: 2 , Page(s): 630 –639.

[7] Aboreshaid, S.; Billinton, R.; Faried, S.O.; Fotuhi-Firuzabad, M, 2000, "Impact of unified power flow controllers on power system reliability", Power Systems, IEEE Transactions on , Volume: 15 Issue: 1, Page(s): 410 – 415.

[8] Bruno, S.; De Tuglie, E.; La Scala, M.; Scarpellini, P, 2001, " Dynamic security corrective control by UPFCs", Power Systems, IEEE Transactions on , Volume: 16 Issue: 3 , Page(s): 490 –497.

[9] Bian, J.; Edris, A.; Nelson, R.J.; Ramey, D.G, 1997, ".A study of equipment sizes and constraints for a unified power flow controller", Power Delivery, IEEE Transactions on , Volume: 12 Issue: 3 , Page(s): 1385 – 1391.

[10] Enslin, J.H.R.; Spee, R.; Zhao, J, 1996, "Operation of the unified power flow controller as harmonic isolator", Power Electronics, IEEE Transactions on , Volume: 11 Issue: 6, Page(s): 776 –784.

[11]Hingorani, N.G., and Gyugi, L, 2001, "Understanding FACTS: concepts and technlolgy of Flexible AC Transmission Sytems, Standard Publishers Distributors, Delhi.

[12] Uma Rao. K, 1998, "Power System Stability evaluation and improvement using Energy functions and FACTS controllers", a Ph.D thesis submitted to Indian Institute of Science, Bangalore.