AN APPROACH TOWARDS A SYSTEMATIC FRAMEWORK FOR THE ASSESSEMENT OF POWER QUALITY ISSUES

Nazineh EASSA
Alex. Elect. Dist. Co. – Egypt
nazineh@hotmail.com

Mervat ELNAHASS
Alex. Elect. Dist. Co. – Egypt
mervat_nahass2006@yahoo.com

Mona KASEB
Alex. Elect. Dist. Co. – Egypt
mnmaal@yahoo.com

Amani ATTIA
Alex. Elect. Dist. Co. – Egypt
amibrahim2001@yahoo.com

ABSTRACT

New technology era is based on electronic devices which increase proportion of nonlinear characteristics in total distribution power system load.
Alexandria Electricity Distribution Company (AEDC) has formed a Working Group for setting up a regularity framework which has focused on three issues: Connection principles for disturbing loads in low voltage networks, determination of the impact of consumers' loads on voltage total harmonic distortion and assessment of the economics of power quality.
By setting up this framework, it can contribute to improved decision making in this area and provide a concise summary of existing knowledge in a single guide and proposing a common methodology for dealing with these important issues.

INTRODUCTION

The number of nonlinear loads is increasing, particularly with the development of electronics in equipment for the general public and variable speed in industry. This induces an increase in harmonic disturbance levels on the public networks.
Harmonic voltage levels in low-voltage networks represent an important aspect of power quality. From the point of view of electromagnetic compatibility, they must be kept within the compatibility levels to enable all the equipment supplied by the public networks to function satisfactorily. In other respects, since electricity is also defined as a product, the utility could be held responsible for excessively high harmonic levels and any damage they cause to customers' property.
In the area of power quality, it is sometimes easy to reach a technically correct solution, and convert it into a standard, only to find out later on that the standard has unexpected and unfortunate economic effects for society as a whole. At present, there is increasing activity world-wide from industrial associations, and from electric regularity bodies as well as from standard setting organizations regarding power quality regulation and solutions. These activities include setting standards on equipment immunity to power quality events, revising technical standards and standardizing power quality measurements. All of these activities have both intentional and inadvertent economic consequences. Each activity may increase or decrease the costs associated with power quality.

CONNECTION PRINCIPLES FOR DISTURBING LOADS

A nonlinear load, even when submitted to a sinusoidal voltage, will draw a non-sinusoidal current. The absorbed harmonic components depend only on the characteristics of the load, and not on the grid; thus they behave like sources of harmonic currents. Well known low voltage examples include all power electronics converters, televisions, computers, dimmers for lighting appliances, welding machines.
The harmonic voltages are a result of the harmonic currents injected by non-linear loads in so far that the grid has significant harmonic impedance for each harmonic frequency.
There are two kinds of effects of harmonics:

- Short-term effects: controllers of electronic systems can be greatly disturbed due to a change of the zero crossings; ripple control receptors can be perturbed, as also relays that are used for distance controllers; dimmers can also be affected.
- Long-term effects: such as heating of cables, transformers, capacitor banks, equipment and rotating machines; noise and vibrations can also be provoked.

IEC 61000-2-2 specifies the compatibility levels for individual harmonic voltages in low voltage. The existing international EMC standards dealing with limits for harmonics produced by LV appliances are product standards.
IEC 61000-3-2 provides individual harmonic current limits for appliances with a rated input current ≤ 16 A per phase, while IEC 61000-3-12 deals with all equipment having a rated input current > 16 A and ≤ 75 A per phase.
IEC 61000-3-12 proposes an assessment procedure in three stages, with individual currents emission limits, essentially depending upon the short-circuit ratio at the connection point.
The short-circuit ratio is defined for a balanced three-phase equipment as follows:

$$R_{SCe} = S_{SC} / S_{equ}$$

Where,

S_{SC} is the short circuit power.
S_{equ} is the rated apparent power of the equipment.

This approach relies on the assumption that the LV network harmonic impedance is mainly inductive, excluding any resonance.

The proposed procedure

The basic rule of the connection principles is:

1. To analyze the consumer's installation and locate the major sources of harmonics.
2. To find an acceptable compromise between the strength of the network on one hand (i.e. its ability to absorb harmonic current) and the harmonic level caused by consumer's installations, on the other hand.

The key element in finding the compromise is the determination of the short-circuit ratio.

Having analyzed the consumer's installation and located the major sources of harmonics, the following procedure is applied:

- If the user of the distorting loads is able to present IEC 61000-3-12 compliance declarations, the procedure consists essentially in evaluating R_{SCe} at the connection point and comparing it with the minimum needed according to the manufacturer.
- If there is no available compliance declaration, a theoretical computation of the harmonic currents injected by the load must be done.
- Knowing these harmonic characteristics, the minimum needed R_{SCe} is obtained using IEC 61000-3-12 and must be compared with the actual one.
- If the disturbing loads do not meet those criteria, a supplementary evaluation stage is considered.
- At this level, other evaluation methods could be used, resulting from a dialogue between the consumer and the utility (Compensation, Reinforcing the grid, ….) .

DETERMINATION OF THE IMPACT OF CONSUMERS' LOADS ON VOLTAGE HARMONIC DISTORTION

AEDC has obligations to control and maintain the voltage total harmonic distortion (VTHD) within allowed boundaries according to the international standards.

Here, we will show existent consumers' nonlinear electrical apparatus feedback impact on distorted harmonics waveform of the supplied voltage on the power distribution connection point.

Additional increase of the total harmonic distortion of voltage (ΔVTHD) on consumers' power distribution connection point caused by nonlinear loads depends on:

- Total electrical equipment load.
- Participation of nonlinear load shown by current total harmonic distortion.
- Power system impedance on the connection point.

Determing of ΔVTHD generated by nonlinear consumers' load on the distribution network connection point is conveyed by the network impedance change of monitored points.

Simultaneous measuring of VTHD is performed in two different network points with different impedances. The example of a power transformer simultaneous measurement on medium voltage and low voltage side where the consumer is getting electricity from is shown in Fig. 1. Comparative daily diagram recorded VTHD on MV and VTHD on LV is shown in Fig. 2.

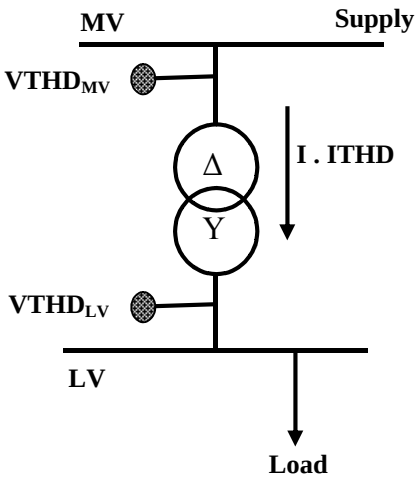

Fig. 1 Measurements on MV / LV transformer

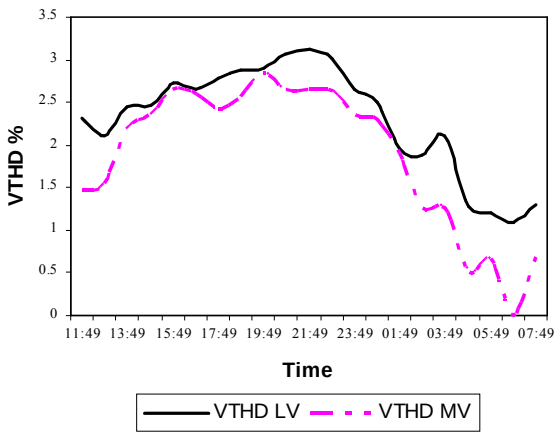

Fig. 2 Recorded daily diagram for $VTHD_{MV}$ & $VTHD_{LV}$

The increment of $VTHD_{LV}$ values compared to $VTHD_{MV}$ value is caused by:

- Non transfer of the tripplen low voltage harmonics to the MV side of transformer because of the delta connection of winding on the MV side.
- Harmonics voltage distortion increment due to an impedance increase from Z_{MV} to Z_{LV}.

Considering second mentioned cause and having:

$\Delta VTHD = k \cdot I \cdot ITHD \cdot Z$

Where,

$\Delta VTHD$: Additional increase of the total voltage harmonic distortion caused by nonlinear load.
K: Variable determining the effect of nonlinear load on VTHD increment.
I: Total current of consumer's equipment.
ITHD: Total current harmonic distortion of consumers' load.
Z: Power system impedance on the connection point.

Then,

$\Delta VTHD_{LV} = \Delta VTHD_{\Delta Z} \cdot Z_{LV}/\Delta Z$

$\Delta VTHD_{MV} = \Delta VTHD_{\Delta Z} \cdot Z_{MV}/\Delta Z$

Where,

$\Delta VTHD_{LV}$: Additional voltage total harmonic distortion increment caused by nonlinear consumers' load on low voltage busbar.
$\Delta VTHD_{MV}$: Additional voltage total harmonic distortion increment caused by nonlinear consumers' load on medium voltage busbar.
$\Delta VTHD_{\Delta Z}$: Additional voltage total harmonic distortion increment caused by nonlinear consumers' load on power transformer impedance ΔZ.
Z_{LV}: Network impedance on LV busbar.
Z_{MV}: Network impedance on MV busbar.
ΔZ: Transformer impedance.

ASSESSMENT OF THE ECONOMICS OF POWER QUALITY

AEDC Working Group aims to produce a guide that summarizes available information about cost-benefit analysis of power quality, and to propose a framework for how to assess costs, how to assess the economic impact of mitigation, and how to assess the economic impact of immunity.
The scope of work is:
1. Review methods of assessing these costs including such aspects as:
- Cost of energy not supplied.
- Energy losses associated with poor power quality.
- Direct and indirect costs to customers.
- Actual customer costs for various industrial sectors.
- Methods of collecting customer costs.

2. Propose a standardized method of collecting the above information.
3. Recommend a methodology of using this data to cost power quality interventions on the power system or within the customer plant.

Optimum cost-benefit analysis

The process of evaluating power quality costs requires the establishment of a methodology based on the fundamental premise of implementing a suitable cost-benefit analysis.
It is generally found that accurate power quality cost assessment involves careful consideration of three major factors:
1. Disturbance profile at the busbars involved.
2. Customer load susceptibility.
3. Calculation of the losses induced by damage or malfunction of equipment.

The aggregation of the costs of voltage quality disturbances is a complicated issue as well. A disturbance event may affect one piece of equipment, but the consequences may be much wider, because other equipment may turn off.
From the electric utilities' point of view, reducing the number of voltage dips and short interruptions would improve customer satisfaction. In today's competitive electrical market, the standard of power quality has to be constantly upgraded to ensure business survival. The question is: how do we justify for the investments to improve power quality?
Obviously, precise information regarding the financial losses incurred by disturbance events is essential to both customer and the utility. This information provides the basis for cost-benefit analysis for all potential investments.

Methodology of cost evaluation

For the purposes of cost evaluation, it is proposed to separate power quality into two classes:
A. Slowly changing power quality situations, such as supply voltage variation, flicker, harmonic voltages and voltage unbalance.
B. Sudden, abrupt power quality events, such as interruptions, supply voltage dips, swells and transient over voltages.

Two economic analysis methods are considered to extract data about PQ costs:
1. Direct method, which considers:
- Probability of event occurring.
- Characteristics of events.
- Probability of equipment response to those characteristics.
- Cost of immunity or mitigation.
- Heat losses.
- Reduced lifetime of equipment.
- Protection system malfunction.

This data leads to a very precise answer about the costs of power quality events, but correct input data are difficult to obtain.
2. Indirect method, which considers some measures such as:
- How much did historical events cost.
- How much is a customer willing to pay.

This data is generally easier to obtain correct ranges of values.

General overview on the proposed guide

The aim is to establish an appropriate framework of methodologies that will assist in finding the best trade-off and solutions.

For this purpose, guidelines provided by international standards are discussed and assessed, also representative studies conducted in Europe and USA are investigated. Finally, methodologies recently proposed by researchers for financial loss assessment of power quality disturbances are gathered and analyzed.

The guide includes the following parts:

1. Quantifying the economic damage suffered by industrial customers due to nuisance process trips induced by voltage dips and short interruptions.
2. Quantifying the economic effects of harmonics on equipment and components, such as: malfunction, aging and additional energy losses.

CONCLUSIONS

The work on creating a comprehensive framework on topics of power quality is going on. The aim of the Working Group is to establish appropriate methodologies that will assist engineers and economists of all parties involved in power quality problems in finding the best trade-offs and solutions. The framework provides a guide and proposes a methodology for dealing with:

- The assessment of emission limits for large disturbing loads to be connected to low voltage power system.
- Determination of the impact of consumers on voltage THD.
- Assessing the financial trade-offs associated with power quality disturbances.

The guide can contribute to improved decision making in the area of power quality, by providing a summary of existing knowledge and proposing a common methodology for dealing with these important issues.

REFERENCES

[1] IEC 61000-3-12: EMC – part 3 – 12: Limits – Limits for harmonic currents produced by equipment connected to public low-voltage systems with input current > 16 A and ≤ 75 A per phase.

[2] Roger. C. Dugan, Mark F. McGranaghan, H. Wayne Beaty, Marek Samotyj, 1995, "Electrical Power Systems Quality", *MacGraw-Hill Book Companies*, USA.

[3] A.E. Emanuel, 1995, "On the Assessment of Harmonic Pollution of Power Systems", *IEEE Transactoins on Power Delivery*, vol. 103, pp. 1693 – 1698.

[4] A. Robert, T. Deflandre and joint CIGRE/CIRED Working Group CCO2, 1997, "Guide for Assessing the Network Harmonic Impedance", *CIRED Conference Publication no. 438*.

[5] M. Tsukamoto, I. Kouda, Y. Natsuda, Y. Minowa, and S. Nishimura, 1998, "Advanced Method to Indentify Harmonic Characteristic between Utility Grid and Harmonic Current Source", *Proceedings 8th International Conference on Harmonics & Power Quality*, Athens, pp. 419 – 425.

[6] O. Gonbeau, L. Bethet, J.L. Javerzac and D. Boudou, 2003, "Method to Determine Contribution of the Customer and the Power System to the Harmonic Disturbance", *Proceedings CIRED Conference*.

[7] W. Xu, E. E. Ahmed, X. Zhang, and X. Liu, 2002, "Measurement of Network Harmonic Impedances: Practical Implementation Issues and Their Solutions", *IEEE Trans. Power Delivery*, vol. 17, no. 1.

[8] J. V. Milanovic and C. P. Gupta, 2006, "Probabilistic assessment of finantial losses due to interruptions and voltage sags", *IEEE Transactions on Power Delivery*", vol. 21, pp. 918 – 924.