SMART GRID TECHNOLOGIES FEASIBILITY STUDY : INCREASING DECENTRALIZED GENERATION POWER INJECTION USING GLOBAL ACTIVE NETWORK MANAGEMENT

Olgan DURIEUX
ORES - Belgium
olgan.durieux@ores.net

Vanessa DE WILDE
Elia - Belgium
vanessa.dewilde@elia.be

Jean-Jacques LAMBIN
Elia - Belgium
jean-jacques.lambin@elia.be

Stéphane OTJACQUES
Elia - Belgium
stephane.otjacques@elia.be

Michel LEFORT
ORES - Belgium
michel.lefort@ores.net

ABSTRACT

The current paper presents how smart grids technologies like Active Network Management (ANM) can be used as an alternative solution to network infrastructure reinforcement in order to increase Distributed Generation (DG) connection/injection possibilities.
The paper describes an ANM feasibility study that is currently led by both the TSO Elia and the DSO ORES in the east area of Belgium on a whole network facing potential congestion problems. The study is performed by Elia and ORES with the competences and know-how of Smarter Grid Solutions Ltd. (UK, Glasgow).
Principles of access to the network and new rules of connection are presented.
The global approach needed to find an economical and technical optimal solution on a coordinated way with the TSO and the DSO is underlined.
Besides the ANM feasibility study, the paper also presents how Elia and ORES are currently testing flexible access methods in a concrete and limited pilot project.

INTRODUCTION

The Belgian energy landscape has got one TSO, which is unique and federal, and several DSO's, which are regional.
Elia s.a. (www.elia.be) is the single TSO (owner and operator of the electricity transmission network) in Belgium.
ORES s.c.r.l. (www.ores.net) is the distribution network operator (distribution of 36 TWh in electricity per year and 61 TWh in gas per year) for the great majority of distribution network owners in the Walloon area (south of Belgium).
Due to the increasing amount of distributed generation injecting active power at distribution level, the power flow through the HV/MV transformers in the substations connecting the transmission (Elia) and distribution (ORES) networks became clearly bidirectional, requiring closer TSO/DSO collaboration and extended data exchange for managing those flows and safeguarding the system security.

A high potential for distributed generation deployment (mainly wind farms) has been detected in Belgian areas where connecting these new power injections could threaten the grid security as the grid is subject to potential thermal overload in worst case situation.
One of these areas is situated in the eastern part of Belgium and the electrical network is the so-called "east loop". Both transport (70 kV) and MV distribution (15 kV) networks are facing potential congestion problems. Therefore, ORES and Elia decided not to wait for the infrastructure reinforcement, which could lead to long delays, but would like to preventively address the problem and enable the connection of additional generation units using technologies like real time active network management solutions. So they have launched a Smart Grid project on this part of the network aiming at studying the feasibility of a solution which could be replicated on other congested networks.

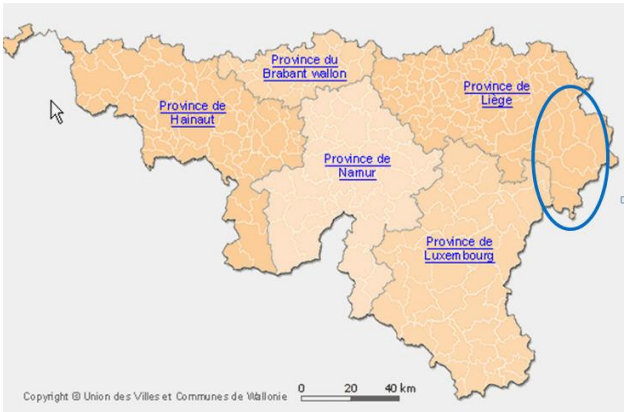

Figure 1 : Belgium, map of Wallonia, location of the "east loop" network.

ANM takes control actions to automatically maintain networks within their normal operating parameters. What is ANM could be explained in many ways but a good

reference definition is given in the report issued by the CIGRE C6.11Working Group relative to active distribution networks [1].

The growing penetration of distributed generation makes energy flows variable in value and direction, which is a complete change and a big challenge to face for network operators. As it is not economically possible to replace existing network infrastructure by a new "fit-&-forget" one and as energy flows can change at any time, existing networks have now to be managed in an active way within compressed delays (as close as possible to real time). This is only possible with the deployment of robust telecommunications networks and ICT systems (data management systems, power flow simulators, state estimators, SCADA, etc.) as a critical basis of the power network.

Up to now, criteria for new generators connection onto the network were based on installed power, i.e. a producer is accepted if it is possible to permanently inject its maximum power on the network in N-1 situation. Typical on shore wind farms generation can be below 50% of the rated maximum power for 85 % of the operation time.
As an example, figure 2 shows the monotone curve of a wind farm injected power versus percentage of time.

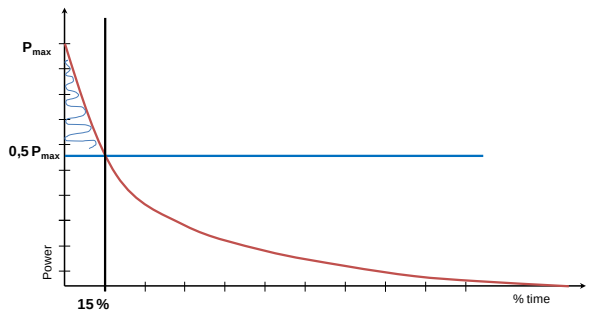

Figure 2 : example of wind farm monotone curve.

This fact leads us to conclude that the non used reserved capacity could be dynamically allocated for new incoming generators if network and production systems are both managed in an active way. This new concept of capacity allocation requires dynamic injection rules to be defined and applied.

ACTIVE NETWORK MANAGEMENT

Analysis

Topology of the network

The so-called "east loop network" is a set of 70 kV transmission lines supplying substations located in the eastern area of Belgium. A simplified topology of this network area is shown on figure 3.

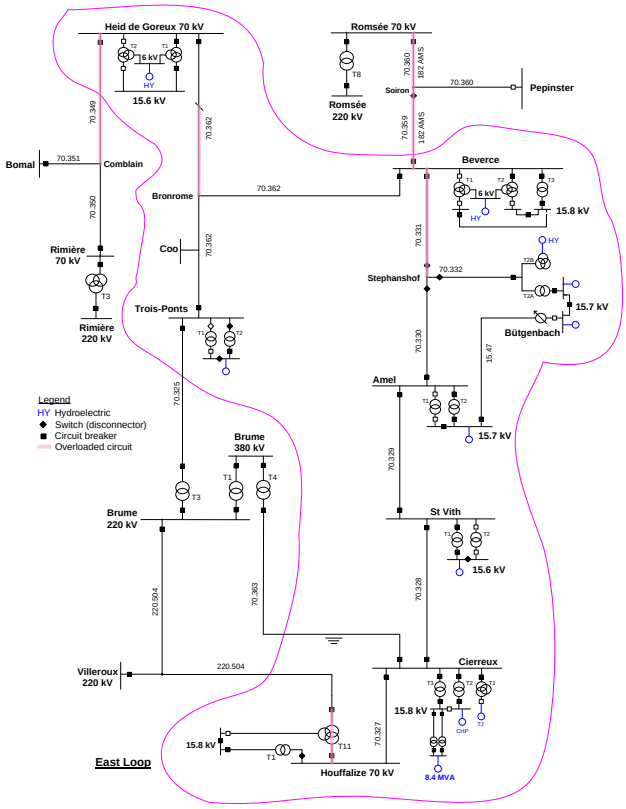

Figure 3 : east loop network simplified topology.

All 70 kV equipments including 70/15 kV transformers are managed by Elia; the MV network is managed by ORES.
The 70 kV loop is directly connected to 380 kV and 220 kV networks through two substations of the east loop (Brume and Houffalize) and indirectly through two overhead lines connected to substations located outside the area (Romsée and Rimière). Most of the HV/MV substations are operated with one transformer (a second one is ready for backup situation). Some generators are directly connected to the 70 kV network but most of them are connected to the distribution network. Most of the loads are connected to the MV network.
The east loop was initially designed for a rural area. A large amount of wind generators and other DGs connected on this network (solar panels generation on distribution low voltage networks are significant) leads to power flow "inversion" (i.e. from distribution to transmission) and 70 kV lines overload.

Current congestions

There are currently no thermal overload on the east loop network and all generators have a firm connection i.e. they can produce their contracted maximum power in N-1

situation. Load flows studies however show that thermal overload problems due to power flows on the transmission circuits are expected with existing generators and future (contracted) ones in case of low consumption.

Curtailment needs

The east loop is the focus of interest for many potential producers. Reinforcements of potentially overloaded circuits offer a solution for contracted generators but don't allow to host further more firm DGs on the network. Substations have 2 or 3 output circuits through which extra power can be flown away. Reinforcements will modify constraint locations and move thermal overload problems to others circuits under different outage conditions.
Overloads level depends on production and consumption conditions. Static line rating is currently used for the definition of line overload limit but Elia is performing some tests with Ampacimon© monitoring systems [2] [3] for dynamic line rating, which would lead to a real time line ampacity.
Curtailment of produced power can therefore be an interesting alternative to host further DGs on the network. Local congestions or power flows over thermal limits can be solved with the right choice of new DGs modulation.
Current DGs still have a firm connection and can't be contractually curtailed.

Principles of conditional access

If a network is being operated with generators that have conditional access and there is a constraint location where more than one generator is contributing to the constraint then there needs to be a rule or method for deciding the order and by how much each generator is curtailed.
Principles of Access (PoA) define how multiple generators participating in a constraint management scheme will be treated with respect to one another in the allocation of curtailment to resolve the network constraints.
Some examples of identified possible PoA are listed hereafter :

- Last In First Off (LIFO) : the last generator to be connected to the network is the first one to be curtailed or tripped off in case of constraint.
- Technical optimisation : generators are curtailed for their output to be compliant with network constraints and minimize or maximize a given parameter (e.g. injected energy).
- Shared percentage : generators are curtailed with the same percentage of their installed power for instance.

PoA are chosen after an assessment based on different criteria.
In the east loop case study Elia and ORES have chosen to use optimal power flow (eliminating thermal overload and maximizing power injection at substation level) on the 70 kV loop. A shared percentage method proportional to the output power at the time of the constraint has been chosen to curtail generators in the substations contributing to the constraint as issued by the power flow calculation.
If non technical aspects (which are not developed in the current paper) are taken into account, this method is maybe not a final and replicable choice but it appears to technically address the constraint problem and is equitable for generators.

Curtailment simulations

The curtailment assessment would give an estimation of yearly energy production (MWh) and constraint volumes i.e. it estimates how much energy can be produced and how much production must be curtailed for each time step (1/4 hour), in each substation.
A minimum viable generation capacity depending on the type of the generator (wind or CHP) is defined with an *utilization factor*.
On the basis of :

- ¼ hour measurements of loads;
- ¼ hour measurements of power produced by existing generators;
- profiles for expected (contracted) generators;
- predefined utilization factors;
- chosen PoA;
- lines and transformers ratings;

35040 calculations have to be performed to take into account a complete year.
Simulation results will be detailed while presenting the paper at the conference.

Technical specification

ANM needs measurement devices to be installed on networks and control systems to be updated with calculation tools.
There are two topics which are currently led by Elia and ORES about ANM : the first one is the east loop ANM deployment feasibility study described in the previous paragraphs; the second one is a limited ANM pilot project to test, on a particular renewable production installation on the east loop, the previously mentioned flexible access methods and the whole flow of data to give generators maximum production setpoints.
The following technical specification refers to this proof of concept project which concerns a new windfarm connected on ORES grid with a flexible access to the network contract.

Measurement points and optimal power flow

HV line overload detection is performed by TSO measurement devices and the SCADA. Should the

overload be longer than 20 s then the TSO SCADA notifies the so-called PAS (Power Applications Software) application (allowing real time grid security evaluation and optimization through study modes). The PAS State Estimator (SE) calculates the state of the grid to confirm the overload. If overload is confirmed, the TSO OPF (Optimal Power Flow) defines the needed production reduction for identified generators to smooth away the line overload and gives back to the SCADA environment the allowed maximum injections for the defined generators.

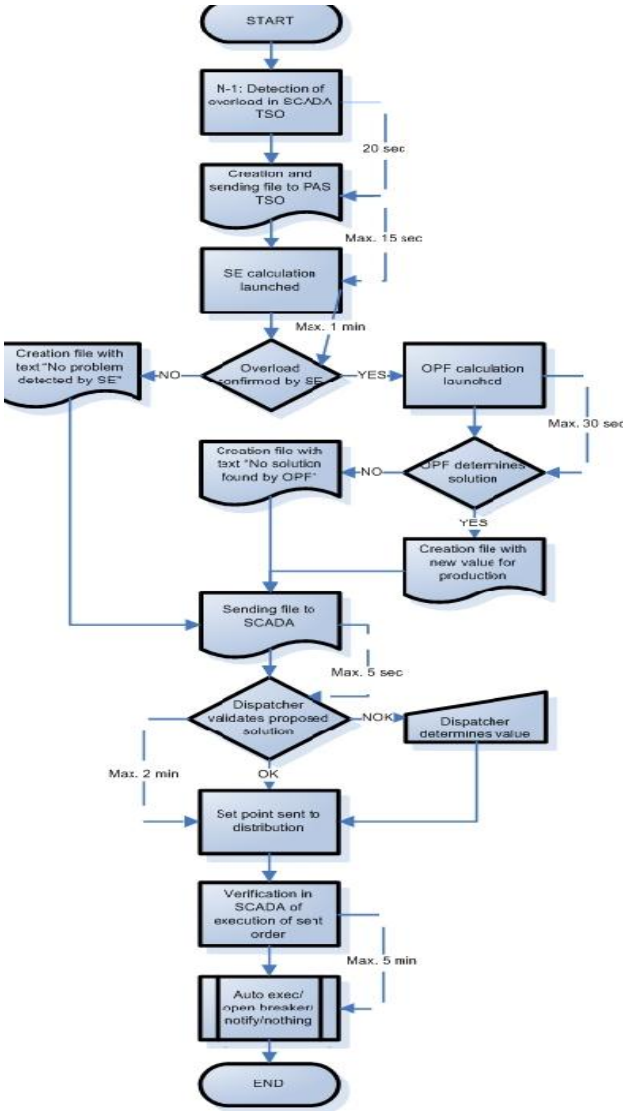

Figure 4 : Elia process overview for overload suppression on the east loop.

Computed setpoints for MV generators connected on ORES network are sent by the TSO to the DSO SCADA from where they are dispatched by ORES to the concerned generation units. Computed setpoints for generators connected on Elia network are sent to the Elia SCADA from where they are directly dispatched to the concerned generation units.
After a setpoint is sent by the TSO, injection has to be reduced within maximum 5 minutes otherwise DSO will take further actions.
A process overview is given on figure 4.

The modulation concept and the way to implement it are being tested in the proof of concept project.
The network monitoring is performed by the SCADA and the PAS (OPF) calculates the windfarm real time maximum admissible production.
The setpoint defined by Elia tools is forwarded by ORES to the wind producer control box to be executed by the generator.

Telecommunications needs

Measurements from the transmission network allowing OPF calculation as described in the previous paragraph must be sent to the TSO simulator through hi-speed and permanent telecommunication links for actions to be taken as fast as possible.
Power flow simulation leads to setting values for maximal power to be injected onto the loop substations. On one hand settings are taken into account by Elia control center for generators connected to the transmission network and on the other hand they must be forwarded to ORES control center to be applied by generators on the distribution network.
The topology is shown on figure 5.

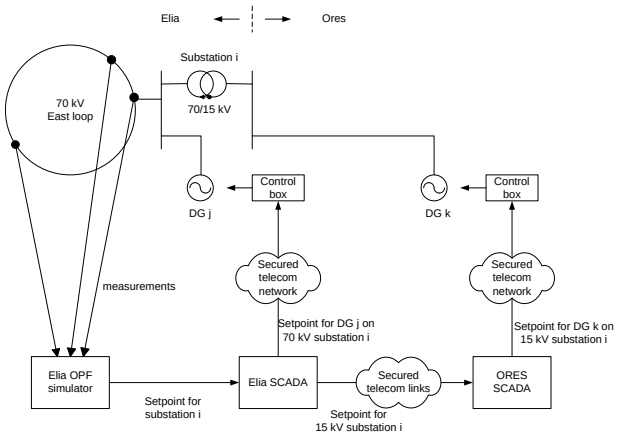

Figure 5 : setpoints flow for DG injection modulation.

Telecommunications links are needed between :
- ORES and Elia SCADAs;
- ORES SCADA and distribution connected DG premises;
- Elia SCADA and transmission connected DG premises.

ORES and Elia SCADAs are interfaced with a common

protocol (TASE2) for them to be able to exchange settings and control messages. Telecommunication links between both control centers must of course be permanent, reliable, redundant and secure. They also have to allow close to real-time communication to exchange critical messages about networks status.
Reliable and permanent telecommunication links have to be used to send modulation settings to generation units. Standard IP based protocols must be chosen.
Some manufacturers have already developed interfaces for their production installations to be interconnected with network operators control systems.

Control systems in producers premises

Current generators with full scale power electronics allow continuous control of active power in a fast and flexible way. This is the case for instance for wind turbines that can be controlled individually with blade pitch angle.
Network operator modulation signals are taken into account by a "control box" (e.g. RTU) to be installed in the production units.

IT security aspects

Different companies (Elia, ORES, productions installations) must be interconnected with communication links for ANM to be possible. Moreover interconnections will be designed on IP networks. It is very important to secure all interface links to avoid any external control of the network.
Strong barriers must be deployed between control centers and the outside world. Lighter security principles should be used in remote installations but data traffic control has to be configured. Several IT security solutions can be considered : firewalls, VPN's, authentication servers, access lists, etc. but it must be kept in mind that systems have to remain simple for management and scalability.

Impacts on operational procedures

For these new network management techniques, control room operators must have clear procedures as well as easy-use and fast tools.
It is necessary to have specific and synthetic network pictures with the useful information only : impacted grid, flows on lines, equipments static rating and current production besides production units.
Developments are currently performed to get to the best solution for both operators and to solve overload problems.

CONCLUSIONS AND FURTHER DEVELOPMENT PERSPECTIVES

Using Active Network Management on networks with potential congestions leads to increase the amount of generators that can be connected to these networks and so maximize the produced renewable energy given the infrastructure limitations.
ANM requires new control equipments and a fast, reliable and scalable telecommunications infrastructure.
This paper also presents the collaboration between the TSO and DSOs as a key success factor for ANM and secure grid operations.

The following non technical aspects have to be analyzed in the near future before a potential roll-out of this technology can be performed :

- Impact of power modulation on the market model and possible model change;
- Commercial/contractual arrangements between current and possible new actors;
- Regulatory framework and potential update of the grid code;
- Increased observability of the electric system and new information exchanges needed for network management and control : data forecasting, data aggregation by renewable energy type, etc.;

Load side management possibilities could also be investigated.

These aspects were not covered by the study and the proof of concept described in this paper.

New opportunities will appear for distributed energy resources to provide ancillary services to balancing responsible parties and the TSO.

GLOSSARY

ANM	Active Network Management
CHP	Combined Heat and Power
DG	Distributed Generation
DSO	Distribution System Operator
HV	High Voltage
ICT	Information and Communication Technologies
IP	Internet Protocol
LIFO	Last In First Off
MV	Medium Voltage
OPF	Optimal Power Flow
PAS	Power Applications Software
PoA	Principles of Access
RTU	Remote Terminal Unit
SCADA	Supervisory Control And Data Acquisition
SE	State Estimator
TSO	Transmission System Operator
VPN	Virtual Private Network

REFERENCES

[1] www.cigre-c6.org

[2] www.ampacimon.com

[3] E. Cloet, Prof. Dr Ir J-L. Lilien, P. Ferrières, 2010, "Experiences of the Belgian and French TSOs using the "Ampacimon" real-time dynamic rating system", *Proceedings CIGRE 2010.*

[4] A. Vergnol, 2010, "Intégration dans le réseau électrique et le marché de l'électricité de production décentralisée d'origine renouvelable : Gestion des congestions locales", *Thèse de Doctorat Ecole Centrale de Lille, France*.

[5] R. A. F. Currie, G. W. Ault, D. F. Macleman, R. W. Fordyce, M. A. Smith, J. R. McDonald, 2007, "Design and trial of an active power flow management scheme on the North Scotland network", *Proceedings CIRED 19th International Conference on Electricity Distribution*, paper 0421.

[6] M. J. Dolan, E. M. Davidson, G. W. Ault, J. R. McDonald, 2009, "Techniques for managing power flows in active distribution networks within thermal constraints", *Proceedings CIRED 20th International Conference on Electricity Distribution*, paper 0736.

[7] L. F. Ochoa , A. Keane, C. Dent, G. P. Harrison, 2009, "Applying active network management schemes to an irish distribution network for wind power maximization", *Proceedings CIRED 20th International Conference on Electricity Distribution*, paper 0890.