A NOVAL DETECTION SYSTEM FOR BROKEN DISTRIBUTION CONDUCTOR ON RADIAL SCHEME

Weerapun RUNGSEEVIJITPRAPA
Chulalongkorn University – Thailand
weerapun.r@chula.ac.th

Anantachai PONGTHAVORNSAWAD
Provincial Electricity Authority – Thailand
anantachai.pon@pea.co.th

ABSTRACT

Overhead line distribution system is generally used in rural area with a free space. In case of broken conductor, the pedestrian may be injured from high-voltage conductor, if the system cannot detect and make a command to open the circuit breaker. In this paper, we apply the principle of time shifting to detect the broken line conductor on the source side with a variation of fault impedance compared with the ratio of negative to positive sequence current. The studied results were taken from the simulation program, e.g. Alternative Transient Program, as well as the experimental circuit in laboratory.

INTRODUCTION

Nowadays, the protection system in overhead distribution system is generally used the current transformer and voltage transformer to compare the setting of magnitude. It cannot detect the broken line fault on the source side with high impedance fault, because the magnitude of the fault current may be possible less than the setting. In addition, Lazkano, *et al.* [1] has presented the limit fault current on the different grounding surfaces. Therefore, the protection system cannot terminate the fault. However, if the broken conductor is touching the ground, the ground potential rise (GPR) may occur and can injure or damage something nearby according to IEEE Std. 80-2000 [2]. The demonstration occurrence with step voltage is shown in Figure 1.

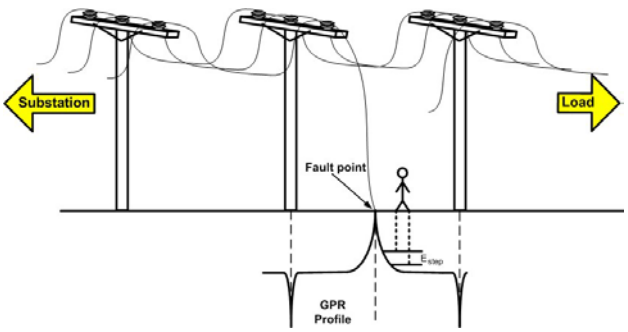

Figure 1: Ground potential rise has risen during the broken conductor touching ground

This novel technique to increase the capability of detection system in the substation is presented. It can use to identify any fault in the distribution system including the broken conductor. This system can use more efficient to monitor the power line in order to provide more safety to human being and others property.

RATIO OF NEGATIVE SEQUENCE TO POSITIVE SEQUENCE CURRENT METHOD VERSUS TIME SHIFTING METHOD

The Ratio of I_2 and I_1 method

Grainger J.J., *et.al.* [3] has introduced the technique to detect the broken conductor in case of single-phase and two-phase. Both cases cause the positive and negative sequence of line current in the power system. For the phase sequence of ABC, these sequences of line current can be obtained by:

$$I_A^{(1)} = \frac{1}{3}\left(I_A + aI_B + a^2 I_C\right) \quad \text{(Eq.1)}$$

$$I_A^{(2)} = \frac{1}{3}\left(I_A + a^2 I_B + aI_C\right) \quad \text{(Eq.2)}$$

Nowadays, the negative sequence current to positive sequence current is applied to detect the broken conductor. The minimum relay setting for this case is suggested at 20% and the operating time is set up at 1 second according to operating manual of AREVA MiCOM P123 [4].

Time shifting method

The power system under the normal condition has the approximate period of the current at 20 millisecond for 50 Hertz. During any fault, the current vector of three-phase system can automatically rearrange into the new status. By this principle, the time shifting of the line current in each phase can be evaluated as shown in Figure 2.

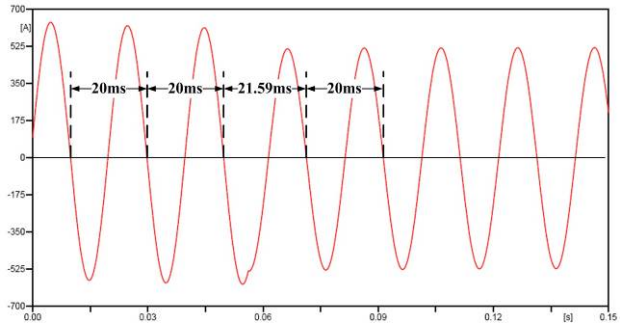

Figure 2: The current signal during the broken line case.

The authors would like to point out the misuse case on the principle of ratio of negative sequence current to positive sequence current versus the principle of time shifting method such as the broken conductor fault on the source side, i.e. the conductor from the substation is touching the ground as shown in Figure 1.

FAULT SIMULATION ON DISTRIBUTION SYSTEM MODEL

The fault simulation in case of the broken conductor on the source side was done on the EMTP. Each line current on the model were observed on the radial feeder model of a distribution system as shown in Figure 3. The components on this model were given as follow:

- The power transformer located in the substation was represented the voltage source and had the system voltage on the secondary side of 22 kV.
- The overhead distribution line was Space Aerial Cable, SAC with a cross section area of 185 sq.mm. with a feeder length of 39.5 km. and represented with inductor and resistor of 0.50mH/km. and 0.207ohm/km, respectively.
- Six three-phase distribution transformers in the range of 50 – 160 kVA, 22/0.4 kV, Dyn1, along this feeder were applied.
- Fault resistance was a studied parameter with a range of 50 to 1000 ohms.
- The fault simulation was applied with two switches controlled by the faulty time within 0.1 second.
- The normal balance current of this system was 118.88 A in each phase.

Broken conductor fault on the source side

The simulation fault occurred on the Phase C in the middle length of a feeder according to the simulation with a variation of fault resistance (R_f) between 50 and 1000 ohms accordance with the simulation circuit on Figure 3. A simulation result of line current on the three-phase system performed with a fault resistance of 200 ohms as shown in Figure 4.

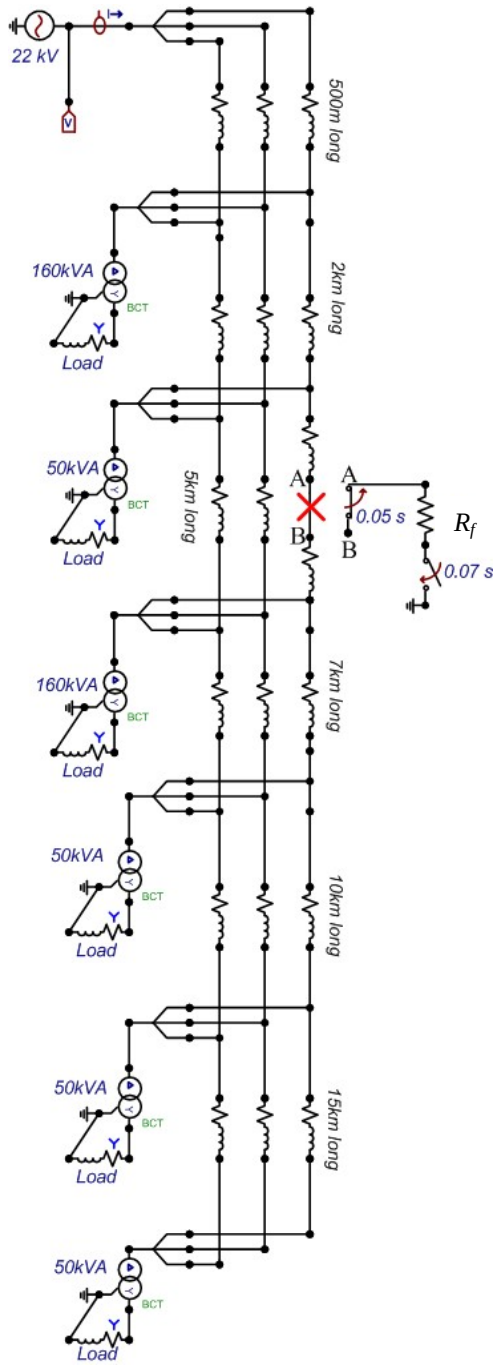

Figure 3: The simulation model of down conductor on source side

Analysis the negative sequence current and the positive sequence current ratio

The line current on each phase, during the fault condition with a fault resistance of 200 ohms, were arranged themselves from the symmetrical current to be unsymmetrical current as:

Phase "A" was 105.57∠ – 90.12° A
Phase "B" was 104.39∠113.08° A
Phase "C" was 149.35∠23.56° A.

The Figure 4 presents the waveform of line current on each phase before, during and after fault. It can be observed that the status of line current was changed from symmetrical to unsymmetrical. The positive sequence current and negative sequence current were occurred. From this situation, the positive sequence current and negative sequence current are 115.57∠ – 103.28° A and 11.29∠ – 119.62° A, respectively. Consequently, the negative and positive sequence current ratio is equal to 9.77% and of course less than the suggested setting value of 20% accordance with the operating manual of AREVA MiCOM P123. Thus, the protection relay for this case could not properly function in this case.

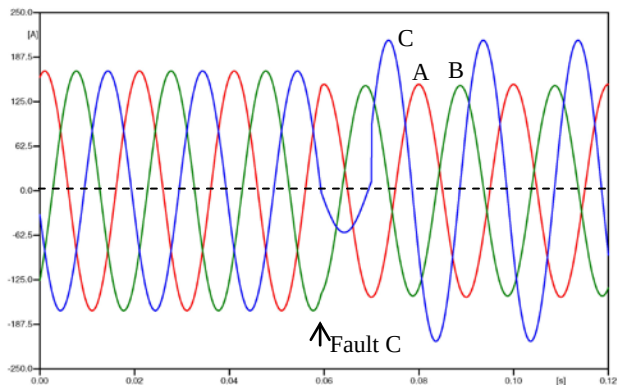

Figure 4: The line current waveform during the broken conductor fault on the source side with a fault resistance of 200 ohms

Analysis the time shifting method

The line current on each phase analyzed with time shifting method is presented as shown in Figure 4. The zero crossing time on the Phase "A" was reduced to 18.98 millisecond, the Phase "B" was increased to 21.10 millisecond, and the Phase "C" was slightly decreased to 19.40 millisecond. Therefore, we can make conclusion that the fault is valid on the phase "C" due to the minimum change on the time shifting. The various fault resistance was studied from 50 ohms to 1,000 ohms. The results are presented on the Table 1. It is quite clear that the minimum on time shifting is found only on the phase "C" independent on the fault resistance and can detect the fault on the whole range of the fault resistance.

However, this method can be applied to the other failure types in the power system. The shifting characteristic on each failure is specific. Therefore, the operator can make a decision to trip or continuously operate the circuit breaker. However, only few situations provide no time shifting such as, inrush current on the switching transformer, unbalance distribution system, etc.

DISCUSSION

The whole simulation results with variation of a fault resistance between 50 and 1,000 ohms are presented in the Table 1. The time shifting on line current during the fault has been found independent from the fault resistance, whereas the ratio of negative and positive sequence current is non-linearity changed in term of fault resistance as presented in Figure 5. The range of fault resistance between 120 and 340 ohms provides the ratio of negative to positive sequence lower than 20% of relay setting. Therefore, the relay can not terminate that fault.

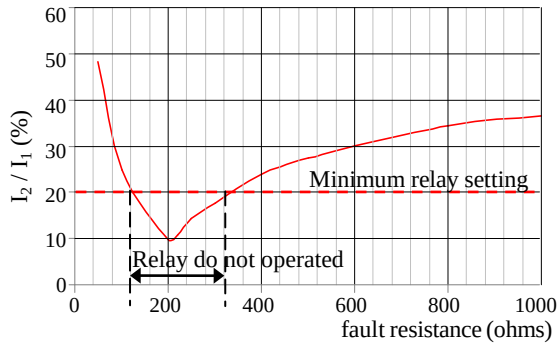

Figure 5: The ratio of negative sequence current and positive sequence current in term of fault resistance

The change of positive and negative sequence current is presented in the Figure 6. It is noteworthy to observe that the rate of change on the both currents is difference. Therefore, the ratio of negative and positive current provides the minimum value at the resistance of 200 ohms.

TABLE 1: Time shifting method compare with I_2/I_1 ratio with a variation of fault resistances

Fault resistance (ohms)	Time shift			% of I_2:I_1
	t_A (ms)	t_B (ms)	t_C (ms)	
50	18.92	21.03	19.23	48.28
100	18.92	21.03	19.25	24.95
200	18.98	21.10	19.40	9.77
220	18.98	21.10	19.40	10.80
250	19.04	21.10	19.55	14.24
300	18.96	21.10	19.51	17.74
400	18.96	21.10	19.58	23.85
500	19.02	21.10	19.58	27.59
800	19.00	21.10	19.58	34.35
1000	18.96	20.97	19.66	36.64

The other advantage of time shifting method over the negative to positive sequence current is the operating time. The minimum operating time of the latter system requires 1 second but the recommendation of the operating manual of AREVA MiCOM P123 is 1 minute. To compare with the time shifting method on the current waveform, the faulty condition can be shortly acknowledged within a period of current, i.e. less than 20 millisecond, without any calculation function. Therefore, it is possible that the fault can be terminated before the broken conductor touching the ground surface. In addition, this developing detection system integrated with microcontroller is used to identify the fault and it can be programmed to eliminate the temporally fault in order to increase the system reliability.

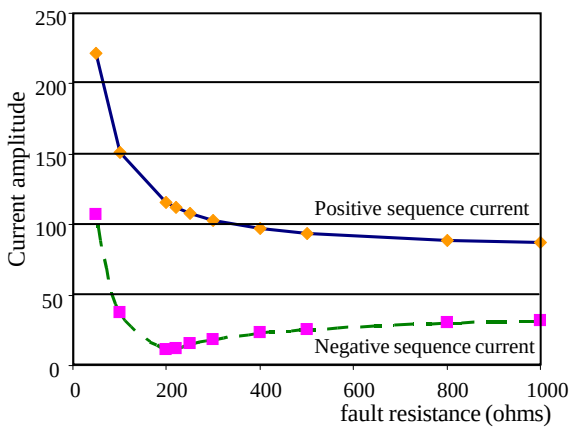

Figure 6: The effect of fault resistance on negative sequence current and positive sequence current

CONCLUSIONS

The novel introducing system with the time shifting principle can be applied to protect the distribution system, especially, the broken conductor on the source side. This system can work within a period of current waveform and does not waste time to calculate with any mathematical function. In addition, the system can precisely operate and report the fault type in order to inform and interrupt the service.

Acknowledgments

The authors would like to sincere thank with Mr. Narong Tantichayakorn to provide the knowledge and suggestion in practical on the protection system of the distribution line.

REFERENCES

[1] A. Lazkano, J. Ruiz, E. Aramendi, L.A. Leturiondo and J.A. Gonzalez, 2000, "Study of high impedance fault detection in Levante area in Spain", *Proceedings. Ninth International Conference on Harmonic and Quality of Power*, vol.3, 1011-1016

[2] IEEE Std 80-2000: *IEEE Guide for Safety in AC Substation Grounding*, 23-28.

[3] John J. Grainger & William D. Stevenson, Jr., 1994, *POWER SYSTEM ANALYSIS*, McGraw-Hill, Singapore, 512-523.

[4] Technical Guide MiCOM P120/P121/P122/P123, AREVA, United Kingdom, P12x/EN TD/H86 Page 14/38 and P12x/EN AP/H86 Page 45-46/76.