PRELIMINARY FINDINGS OF A 1 MW BATTERY ENERGY STORAGE DEMONSTRATION PROJECT

Michael KOLLER
EKZ – Switzerland
michael.koller@ekz.ch

Bruno VÖLLMIN
EKZ – Switzerland
bruno.voellmin@ekz.ch

ABSTRACT

Applications and possible benefits of battery energy storage systems (BESS) have been discussed widely in scientific literature and industry. In an attempt to prepare for upcoming challenges the utility of the Canton of Zurich, EKZ, has acquired the largest BESS of Switzerland. The Zurich 1 MW BESS was designed to provide maximum versatility towards various possible BESS applications. The use cases intended to investigate within the project are outlined and first findings of a peak shaving algorithm applied to an office-building are presented.

INTRODUCTION

Significant changes in distribution grid structure and operation are expected within the near future. Increasing penetration of distributed generation in combination with an aging grid infrastructure demand for a more flexible and efficient utilization of grid assets.

Potential technical and economic benefits of Battery Energy Storage Systems (BESS) are widely described in literature. Therefore a demonstration project is currently under way to explore the practical feasibility of the proposed benefits. The generic implementation of the BESS allows verification of many applications within the distribution grid. The proposed benefits are peak shaving/grid expansion deferral, voltage regulation, islanding, primary frequency regulation and day ahead schedule compliance.

BESS APPLICATIONS

Many benefits of BESS have been outlined and discussed in scientific literature and industry. A review of BESS technology and applications has been assembled by Divya and Østergaard [1].

Increasing distributed generation from intermittent renewable energy sources causes higher fluctuations and even reversal of power flows in the distribution grid. This often leads to violations of the voltage limits as defined in power quality standards. Voltage limits typically pose a bigger constraint on increased deployment of renewable generation than thermal grid constraints. A BESS can be used to regulate the voltage by adjusting its active and reactive power setpoints. Thereby a BESS can improve the grid's ability to absorb in-feed from distributed generation and ensure a more efficient utilization of grid assets.

The operation of a small electric network without a connection to the larger power grid is referred to as island mode. Lead-acid battery systems have long been used to ensure uninterruptible power supply (UPS) to critical loads during grid outages. Grid connected BESS can also operate in island mode when supported by the inverter system. Whenever the grid reference voltage is lost the inverters change their operation mode from acting as a current source to a voltage source. A grid connected BESS can therefore provide similar services as a conventional UPS system. A BESS placed on-site of a larger load can improve availability of electrical supply and render a conventional UPS redundant. Another use of a BESS in island mode is the regulation and balancing of a microgrid. Microgrids are sections of a larger grid containing local generation and loads capable of operation in parallel as well as independent from the larger power grid. In case of a power loss in the superior grid the microgrid can continue operation independent until the larger grid is restored. These applications are particularly attractive in regions with weaker power systems but they could also serve to improve and ensure security of supply in stronger power grids. In order to control the voltage and to ensure equilibrium between supply and demand, microgrids often contain some sort of energy storage, e.g. a BESS. In depth discussion of trends and a list of existing microgrids is provided in [2].

Every larger grid has a dedicated mechanism to correct for short-term imbalances between supply and demand, which cause deviations from the nominal system frequency. In the synchronized region of the ENTSO-E continental Europe grid zone the fastest stabilization mechanism is referred to as primary frequency regulation. It has been suggested that with the right operational strategy and a hybridisation with resistors a lead-acid based BESS could operate profitable under German market conditions [3].

The reduction of peak loads offers the opportunity of grid expansion deferral. Grid expansion planning is based on current and projected peak loads and typically includes a safety margin to account for unexpected load development. The short project timelines of BESS allows significantly reducing the safety margin during grid expansion planning and therefore reducing capital expenditure on grid infrastructure. Large customers usually pay a demand charge based on their peak grid out-take averaged over a time period of 15 minutes in the period of one month. Reducing the peak grid out-take reduces their electricity bill. However, most current peak pricing schemes are a mere incentive to reduce peak loads and do not represent the large true grid costs arising with high peak loads.

Table 1: Key figures of the Zurich 1 MW BESS.

Property	Value	Notes
Power	1 MW	both directions
Capacity	580 kWh	250 kWh @ 1 MW
Cell type	Li-Ion	$LiMnO_2$ cathode
Efficiency	~80 – 90%	round trip, system level
Lifetime	3500 cycles	2 cycles/day, 250 kWh
System cost	~2.5 Mio CHF	battery ~700'000 CHF

Table 2: Electrical configuration of the battery.

	Cell	Module	Rack	System
Cells in series	1	8	192	192
Cells in parallel	1	3	3	54
Nr. of Modules	-	1	24	432
Nr. of Racks	-	-	1	18
Capacity [kWh]	0.06	1.35	32.4	583.2
Capacity [Ah]	15	45	45	810
Voltage [V_{DC}]	3.3 – 4.05	26.4 – 32.4	633 – 778	633 – 778

Peak shaving with BESS is particularly attractive for load profiles with large peaks of short duration because it can be procured with a small battery capacity.

SYSTEM DESCRIPTION

The commissioning of the Zurich 1 MW BESS took place in March 2012. Table 1 summarizes the key properties of the realized system. The dimensioning of the battery capacity was carried out by the battery manufacturer in order to fulfil the customer requirement of 3500 cycles with 250 kWh at 1 MW. The Efficiency of the BESS is higher at low loads due to higher battery efficiency. The BESS system costs are relatively high because it is a multi-purpose system allowing testing of a variety of applications. In the future a less general BESS will be significantly cheaper. It is also expected that battery costs will decrease with growing utilization of battery technology in electric vehicles.

Table 2 summarizes the electric interconnection of the cells in the battery. A hierarchical battery management system (BMS) monitors the voltage of the cells of each modules and the current of each rack.

A SCADA system communicates with the BMS, the converter system and various load measurement devices. It also serves to switch between the different power flow configurations shown in Figure 1.

The SCADA system hosts an OPC server, which allows convenient remote reading and writing ability with any standard OPC client. The developed control algorithm for peak shaving uses this interface. The algorithm retrieves current load and battery status values from the OPC server and writes the calculated BESS setpoints on an OPC server item. The operator of the SCADA system can turn the remote control mode on or off. When the remote control by OPC is activated the OPC server item containing the BESS setpoint is immediately sent to the converter control system. A dedicated GPS watch synchronizes all the measurements, which allows for accurate offline analysis.

CONFIGURATION POSSIBILITIES

Figure 1 illustrates some of the possible power flow configurations to test the aforementioned application on a real-life system.

The yellow power flow is used to directly exchange electrical energy with the medium voltage grid. The substation Dietikon is in immediate vicinity of the BESS. Operation modes such as primary frequency regulation are carried out in this way.

The blue power flow indicates the connection of the BESS to the nearby office-building. The small PV plant and several electric vehicle (EV) charging stations together with the conventional building load provide an interesting test bay for voltage regulation and peak shaving.

The red power flow corresponds to the island mode of the BESS. The EKZ office-building can thereby be disconnected from the grid without any interruption in power supply. The mode switch of the inverters from a current source to a voltage source happens automatically as soon as the grid reference voltage is lost. In the blue configuration the inverters will therefore automatically act as a UPS in case of a grid outage. Intentional opening of breaker S_7 has the same effect and can be used for convenient testing of the BESS island mode.

The BESS consists of two containers containing the battery and the converter system. It is planned to relocate the BESS to an appropriate location once the application tests are completed.

PEAK SHAVING

The first application to be tested with the real system is peak shaving. Peak shaving is here carried out in the sense of a customer trying to reduce the demand charge. The peak shaving limit is defined adaptively. Whenever an initial peak shaving goal is violated the limit is raised since the demand charge is only based on the peak load within the given month.

A model predictive control (MPC) algorithm was developed using a linear BESS model [4]. Ideal operation setpoints are found by minimizing a quadratic cost function that considers costs for grid operation as well as for battery degradation due to different utilization patterns. A complete description can be found in [5]. MPC is ideally suited for BESS control due to its ability to consider inter-temporal time constraints arising from the limited storage capacity. The BESS has to be charged before a peak shaving event

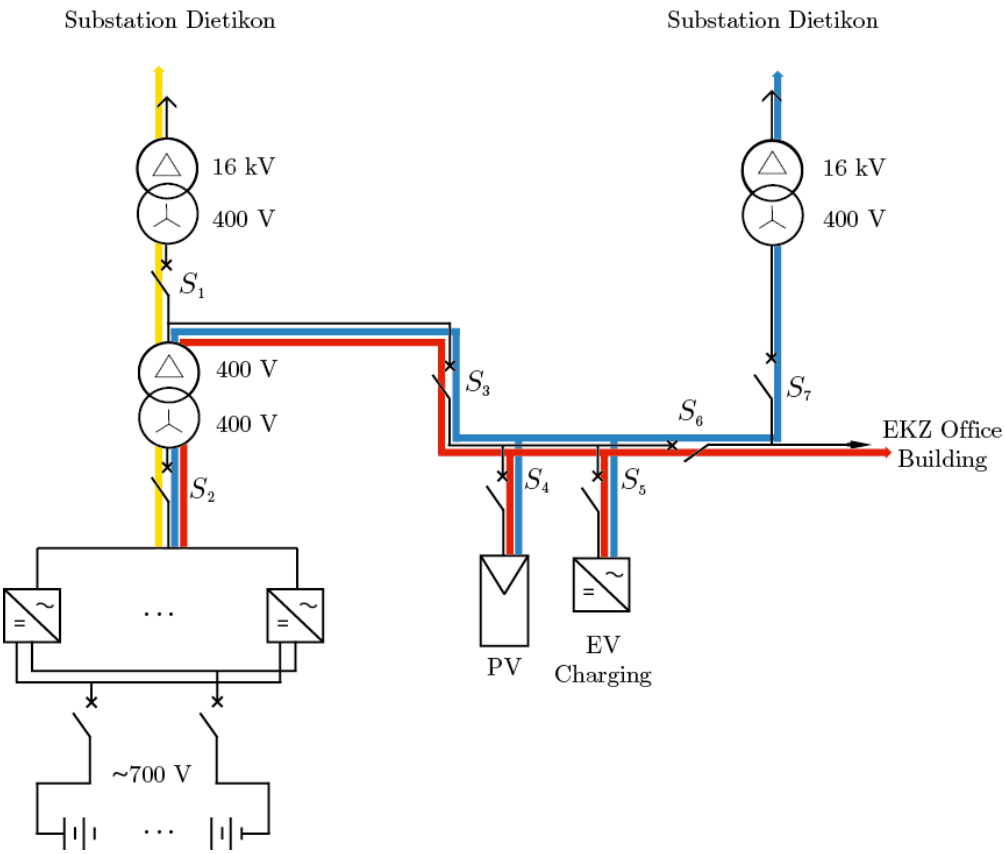

Figure 1: Single line diagram of the test bay. The colors indicate three of many possible configurations to test the BESS under different conditions.

occurs in order to possess maximum peak shaving capabilities. The same holds when a BESS has to absorb power from distributed generation. The BESS needs to be discharged before the actual peak generation arises in order to provide the highest performance

Simple rule-based approaches based on current power measurements struggle with State of Charge (SoC) management. The developed MPC algorithm carries out an optimization over a finite time horizon of one day, considering future load and generation values as well as inter-temporal SoC constraints. Predictions of PV productions are based on meteorological forecasts of global irradiance and temperature and predictions of the office-building load are generated by an autoregressive artificial neural network.

Measurements

In order to protect the battery for potential induced degradation, the control algorithm tries to keep the SoC between 20-80%. Figure 2 illustrates the performance of the MPC algorithm during tests on the Zurich 1 MW BESS. Time resolution of the measurements of load values is 10 seconds (grey). The net load covered by the grid can be calculated according to equation (1).

$$P_{building} + P_{BESS} = P_{grid} \quad (1)$$

A slight deviation from zero is visible during BESS idle times. The parasitic loss drains the batteries and is induced by the converter system. This is an easily correctible mistake to be expected from a first of a kind project. It also validates the strategy to carry out a demonstration project before deploying BESS systems to critical points within the distribution grid.

Performance of the Peak Shaving Algorithm

The measurements in Figure 2 illustrate good compliance with the soft peak shaving limit drawn in red. The limit is referred to as soft because violations are tolerated in emergency cases and induce an adaptive change of the soft limit in future time steps. Several violations of the lower SoC limit are visible which lead to violations of the soft peak shaving grid limit. These occur because of the low building load predictions and a model plant mismatch. The neural network used in building prediction can be further refined with the high-resolution values which are currently being recorded. The model plant mismatch arises partially due to the parasitic battery drain, which is not considered in the internal model of the MPC controller. Both factors lead

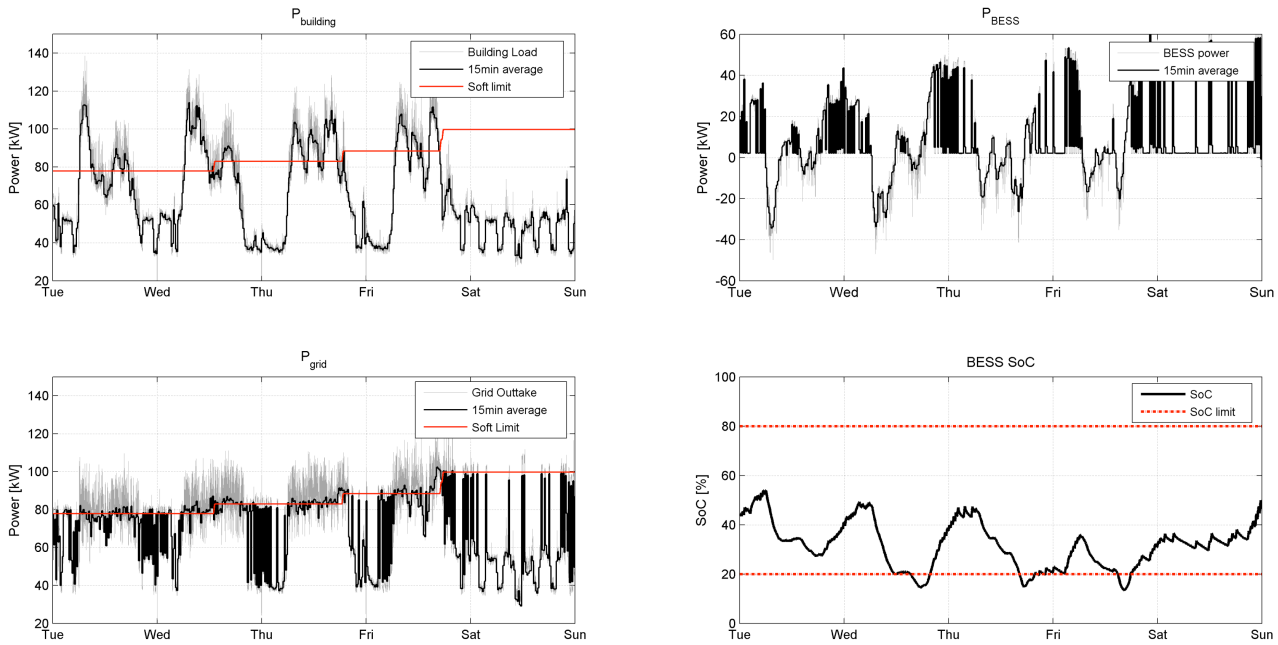

Figure 2: Measurements of the test with the developed MPC peak shaving algorithm. The grey power measurement values and the battery state of charge (SoC) have a time resolution of 10 s.

to insufficient SoC levels in the mornings when peak shaving of the office-building starts. Elimination of the parasitic battery drain and a refinement of the internal MPC model will improve the peak shaving performance and ensure sufficient SoC levels before a peak shaving event.

CONCLUSION

Promising results were obtained from the first tests of the Zurich 1 MW BESS. Refinement of the peak shaving control strategies will ideally prepare for BESS deployment and operation within the distribution grid.
Future tests with the system will involve voltage regulation at the coupling point of the office-building, participation in the primary frequency regulation market and operation of the building compound in island mode.

ACKNOWLEDGEMENT

The authors would like to thank ABB for fruitful discussions and their ongoing cooperation during the development of the Zurich 1 MW BESS.

REFERENCES

[1] K. Divya and J. Østergaard, 2009, "Battery energy storage technology for power systems - an overview," *Electric Power Systems Research*, vol. 79, 511-520.

[2] S.N. Bhaskara and B.H. Chowdhury, 2012, "Microgrids - A review of modeling, control, protection, simulation and future potential," *Power and Energy Society General Meeting*, 1-7.

[3] A. Oudalov, D. Chartouni, and C. Ohler, 2007, "Optimizing a battery energy storage system for primary frequency control," *Power Systems, IEEE Transactions on*, vol. 22, 1259-126.

[4] K. Heussen, S. Koch, A. Ulbig, and G. Andersson, 2012, "Unified system-level modeling of intermittent renewable energy sources and energy storage for power system operation," *Systems Journal, IEEE*, vol. 6, 140-151.

[5] M. Koller, T. Borsche, A. Ulbig and G. Andersson, 2013, "Defining a degradation cost function for optimal control of a battery energy storage system", *submitted to PowerTech 2013.*