SMART STORAGE IN THE ENEXIS LV DISTRIBUTION GRID

Robert DE GROOT
Enexis B.V. | TU/e[1] – The Netherlands
robert.de.groot@enexis.nl

Frank VAN OVERBEEKE
EMForce B.V. – The Netherlands
vanoverbeeke@emforce.nl

Sander SCHOUWENAAR
Enexis B.V. – The Netherlands
sander.schouwenaar@enexis.nl

Han SLOOTWEG
Enexis B.V. | TU/e[1] – The Netherlands
han.slootweg@enexis.nl

ABSTRACT

As a result of the R&D project "Smart Storage", Enexis developed and currently operates an electricity storage system called the Smart Storage Unit (SSU), which is part of the greater Smart Storage System (SSS). Its objective is to enable field-testing and research of advanced smart storage technologies in low voltage (LV) distribution grids. The SSS was installed in the LV distribution grid for the purpose of enabling applications such as, but not limited to: the increase of local PV consumption, improvement of reliability and flexibility, reduction of losses, and maximizing the utilization of local infrastructure. In this paper a detailed technical description of the SSU and its subsystems will be presented.

INTRODUCTION

The way electricity is being consumed in residential areas is expected to change significantly in the nearby future.
Firstly, distributed generation (DG) such as PV and µCHP systems are gaining popularity due to decreasing cost-of-ownership and increasing electricity prices.
Secondly, the introduction of the electric car is already underway and large-scale introduction of the electric car is expected to take place within the next few decades.
These developments cause increased loading of LV and overlaying MV networks. Specifically PV systems installed within confined areas such as neighbourhoods are notorious for having high simultaneity coefficients, thus leading to local voltage problems and network overloading. Furthermore, EV charging patterns and household load profiles have a relatively low correlation with solar irradiation and therefor mismatch with PV system power output.
In order to cope with these problems in the future, without the necessity of heavy investments in grid reinforcements, it is necessary that current grid capacity is utilized to its fullest. One instrument to facilitate this is distributed electricity storage; in order to, in conjunction with DG, locally produce, store and consume electricity, avoiding excessive loading of overlaying networks.

System overview

The SSU was built in order to gain operational experience and to facilitate research on the impact of storage in the electricity grid at the distribution level. The SSU is a battery storage unit based around lithium-ion (Li-Ion) battery packs, capable of storing approximately 230 kWh of electrical energy. Targets set for the SSU include:

- Increase of self-consumption of locally generated PV power;
- Increase of reliability;
- Reduction of losses;
- Maximization of utilization of local infrastructure;

In order to achieve these goals, the SSU is equipped with an advanced control system, capable of controlling battery state-of-charge (SoC) in accordance with pre-specified objectives.

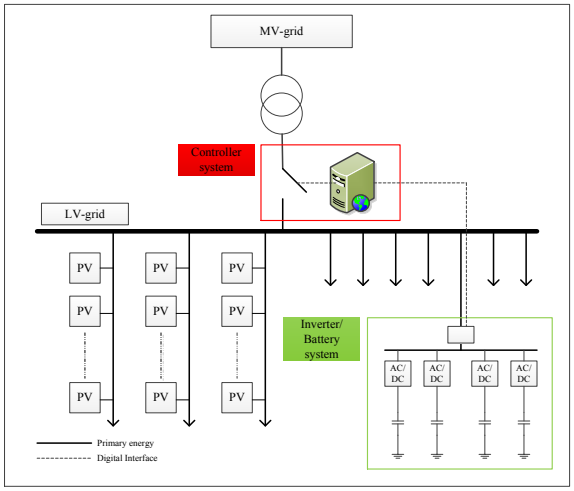

Figure 1: Schematic overview of the Smart Storage System

System lay-out

The SSS can be subdivided into several sub-systems, being a battery system, AC/DC inverters, (protective) switchgear, and a control and measurement system. Depicted in figure 1 is the schematic overview of the SSS, as it is implemented into the LV-grid. The parts boxed in red and green reflect the actual SSS, physically housed into two neighbouring substations. The green box, containing the batteries and the

[1] Electrical Energy Systems Group, Eindhoven University of Technology

inverters, represents a separate substation building which is denoted as the Smart Storage Unit (SSU).The system has been installed in the municipality of *Etten-Leur* in the south-west of the Netherlands, part of the Enexis distribution grid. The local LV distribution grid connects 240 dwellings, of which 40 have locally installed PV systems with a total output of 186 kWp. The LV-grid is connected to the upstream MV-network through a 400 kVA transformer (0.4 / 10 kV), with an average peak-load measured at 385 kW at the moment of installation. The interior of the SSU substation is depicted in figure 2; showing the inverter housings at the top, the battery strings on the floor, and additional hardware and cooling in the back of the station.

Figure 2: Interior of the SSU substation

BATTERY SYSTEM

The battery system consists of four separate Li-Ion battery strings, each with a capacity of 57 kWh, adding up to a system total of 228 kWh at the nominal battery voltage of 696 V. Each string consists of 29 battery modules, with a nominal voltage of 24V. Each module consists of 14 cells, two series of 7 in parallel. Every string is equipped with its own Battery Management Module (BMM), installed to keep track of SoC, battery voltage and temperature, ensuring safe battery operation. Battery-string specifications are shown in table 1.

Capacity	80 Ah
Minimum discharge voltage	609 V
Maximum charge voltage	812 V
Maximum discharge power	100 kW (30 min)
Nominal discharge power	50 kW
Maximum charge power	50 kW (only seconds)
Nominal charge power	25 kW
Minimum operating temperature	20 °C
Maximum operating temperature	50 °C

Table 1: Battery-string specifications

Battery management modules

The BMM has the following functions:

- Communicates battery-state with inverter hardware
  - State-of-charge
  - Critical state variables (e.g. temperatures)
  - Maximum (dis)charge currents
- Prevent damage caused by explosions, overheating, and over-currents within the battery system

The BMM is capable of shutting down damaged or faulty battery modules within the string, such that further damage or a dangerous operating condition is prevented.

SWITCHGEAR

Specialized switchgear and accompanying hardware is in place in order to ensure safe operation of the smart storage system under all conditions. As it is possible for the neighbourhood to run in island operation conditions, using the smart storage as its power source, both unintended energizing of overlaying (blacked-out) networks and unsynchronized re-connection has to be prevented. Therefore, both synchro-check hardware as well as an electrical remotely operated power breaker switch was installed.

Power breaker switch

A power breaker switch with remote operation capabilities was installed to enable safe operation, under both grid-connected as well as island operation mode. The power circuit-breaker is controlled by the Controller & Data Collection (CDC) system. The switch ensures that:

- The LV grid is disconnected (island mode) upon black-out conditions in the overlaying network
- S/C in the overlaying network are not being fed from the from the SSU

In figure 3 the location of the power breaker switch is indicated in red.

Synchro-check

The synchro-check compares the voltage waveforms on both sides of the power-circuit breaker and issues a switching command as soon as synchronisation-conditions are reached. Synchronisation-conditions are as follows:

- Voltages on both sides are in-phase
- Either the voltage difference over both sides of the breaker has to be within a pre-specified threshold
- Or the voltage at the LV-side has to be zero

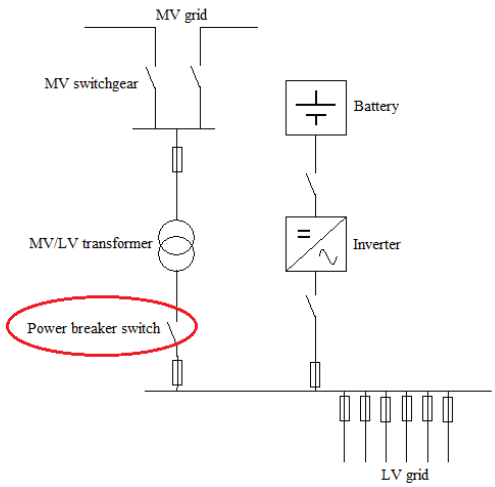

Figure 3: Schematic of the system

Directional over-current protection

A directional over-current protection is installed, which is used to protect the installation in case a S/C current flows into the MV grid. Therefor the protection opens the power breaker switch in case a I > 150A and V < 207 V for >100 milliseconds. This prevents the SSU from contributing to (nearby) short-circuits in the overlaying MV network. This is undesirable since it might damage the inverter and/or battery systems. Moreover, by this mechanism the LV network is transferred to islanded mode automatically in case of an enduring blackout in the overlaying network.

INVERTERS

The inverter system consists out of four separate inverter units, each connected to one of the four battery strings. The inverters convert the DC battery voltage into 230 V_{AC}. Every inverter unit compromises DC switchgear, a computer, a three-phase IGBT inverter, an output filter, and an AC contactor including control hardware. Each inverter is coupled to its corresponding BMM. The embedded computer hardware sends the BMM data to the CDC unit for data-logging purposes. In figure 4 two out of four inverters are shown through the outside side-door of the SSU. The technical details of the inverters are shown in Table 2.

Power (per inverter)	100 kVA at 3x230V + N
Battery voltage	630[2] – 880 V
S/C current (per ph.)	400 A

Table 2: Technical details of the inverter system

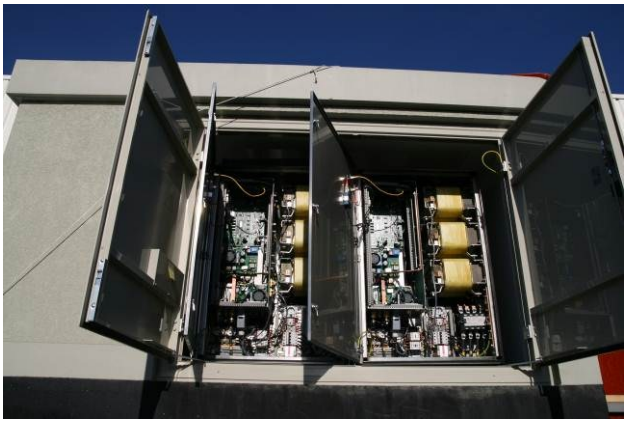

Figure 4: Two out of four inverters, seen from the side-door

Inverter characteristics

The inverter's behaviour is characterized according to the droop curves shown in figure 5. Both active and reactive power output are droop-controlled, necessary for stable island operation. Furthermore, the inverters are capable of black starting the islanded LV-grid.

[2] 630 V is the minimum value in grid connected operation, in island operation the voltage is allowed to drop a further 5%. The inverters' output voltage will drop proportionally.

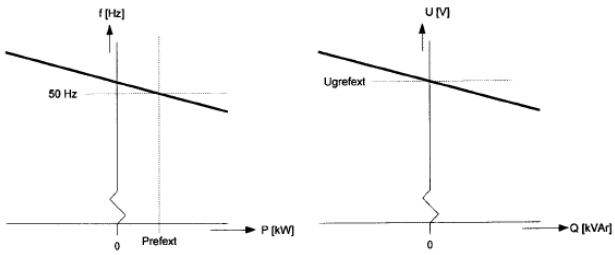

Figure 5: Droop characteristics for voltage and power

CONTROL, MEASUREMENT & DATA COLLECTION

The CDC unit forms the heart of the Smart Storage system. This is the component that transforms the storage device into a Smart Storage System. Three functional components can be distinguished:

- Controller: capable of executing advanced control algorithms;
- Measurement: measurement of power flows throughout the system;
- Data collection: exhaustive data logging for debugging and research purposes;

Detailed descriptions of these three functions will be given in the following subsections.

Controller

As the controller software runs on powerful server hardware, it offers great flexibility and customization possibilities. By simply updating controller software, a different control strategy can be executed. As the controller has internet access, it can not only be controlled and updated remotely, but it is also capable of using external data sources for controlling purposes. This makes it possible to base control on e.g. weather predictions, electricity pricing, solar irradiation, planned events, etc.

The controller has the following base features:

- Executing the overall control algorithm, that determines the inverter set points. These set points are sent to the inverters via a LAN connection;
- Import of external variables, necessary for executing the algorithm;
- Keeping track and supervise state changes of the whole system in between operational states (island mode, grid-connected, black-out, etc);
- Generation of open and close commands for the power breaker switch, as well as checking status updates of the power breaker switch;
- Initiating the synchronisation and reconnection process during island operation as soon as the overlaying networks' voltages meet operational requirements.

Measurements

For control and data collection purposes, voltages, currents and frequencies are measured within the local LV network.

Voltage transformers (VT) and current transformers (CT) are installed both at the inverter connection and in series with the power breaker switch. In this setup it is possible to determine all relevant power flows. These power flows are active and reactive power to and from the SSU, to and from the overlaying MV network, and to and from the neighbourhood. The controller uses this data to prevent reversed power flows to the overlaying network, to determine optimal charging timing, and to prevent overloading of network components.

Data collection

The server hardware is also used as a data sink for logging purposes. The following variables are being logged; 1-minute average values are being saved and will be available for analysis:

- 3 phase voltages at downstream side of the power breaker switch
- Current, active power and reactive power for each phase through the power breaker switch
- Current, active power and reactive power for each phase on outgoing feeders with connected PV systems
- Voltage and current at the DC side of each inverter
- SoC for each battery-string
- Temperatures of the battery systems

Furthermore, certain events are being logged in order to keep track of state changes of the system. These include, but are not limited to e.g. going from grid connected mode to island mode and vice versa, either user initiated, or automatically.

NEIGHBOURHOOD

As the Smart Storage project was intended to provide operational experience, the system was installed into a live LV network in the Netherlands. The corresponding neighbourhood was selected based on the fact that it had a significant number of PV systems installed. Some key characteristics of the neighbourhood are listed below:

- 240 dwellings, 40 with PV systems installed
- Total installed PV: 186 kWp
- 9 outgoing feeders; radial lay-out
- Maximum transformer loading: 385 kVA

In Q3/2012 the SSU was installed into the neighbourhood *'De Keen'* in *Etten-Leur*, the Netherlands. As this is a fairly densely populated residential area, the substation had to be of compact (standard) size. Taking this in consideration, a substation cubicle has been designed to house the SSU, which is roughly 50% below ground level. The compact set-up poses considerable thermal challenges, as described in [1]. An impression of the substation installed in the neighbourhood can be seen from figure 6.

Figure 6: The SSU, as it is installed in the field

RESEARCH

In cooperation with the Eindhoven University of Technology, several research projects are planned. Multiple projects have been defined, investigating the effects on self-consumption, grid losses, reliability, future grid reinforcement, and thermal behaviour. The SSU will be used for field-testing and validation purposes in numerous scientific works.

CONCLUSIONS

The Smart Storage project was initiated in order to gain operational experience with local, distributed electricity storage within low voltage grids. In Q3/2012 Enexis installed its electricity storage prototype into the field, currently numerous research projects are initiated in order to investigate the effect of distributed storage systems on distribution grid operation. Furthermore, through this project Enexis gains direct operational experience with storage solutions in its distribution grid.

ACKNOWLEDGEMENT

The project described in this paper was sponsored by the Dutch Ministry of Economic Affairs under the EOS-LT programme.

REFERENCES

[1] F. van Overbeeke, R.J.W. de Groot, J. Bozelie, J.G. Slootweg, 2013, "Thermal Optimization of an Integrated LV Battery Energy Storage Station", *CIRED 2013*, paper 0180.