DOMESTIC DEMAND SIDE MANAGEMENT TRIAL AND EXTENSION

Bryan O'NEILL
Smarter Grid Solutions – UK
boneill@smartergridsoltions

Nathan COOTE
Scottish and Southern Energy – UK
nathan.coote@sse.com

Colin FOOTE
Smarter Grid Solutions – UK
cfoote@smatergridsolutions.com

ABSTRACT

The Northern Isles New Energy Solutions (NINES) project is an extension to existing forms of Active Network Management (ANM) and a demonstration of the future "smart grid". The NINES project is challenged with finding a solution to accommodate increased levels of renewable generation within a constrained distribution network. Dynamic scheduling of domestic loads is a fundamental aspect of the overall solution. It is the intention of the project to demonstrate that the dispatch of domestic demand side management (DDSM) load can relieve constraints on new renewables and reduce the variation in net demand that must be supplied by Lerwick Power Station. This paper discusses and presents the results of a small trial of new DDSM equipment. The paper goes on to discuss how the lessons learned have been incorporated into the architecture and control philosophy adopted for the wider roll out of DDSM across the Shetland Islands.

INTRODUCTION

The Northern Isles New Energy Solutions (NINES) project will trial a set of new technologies and solutions including domestic demand side management (DDSM). The key objectives of the NINES project are to:

- Allow the maximum possible amount of renewable generation to be connected and reduce the amount of fossil fuel consumption.
- Reduce the difference between the minimum and maximum daily net demand that must be supplied by Lerwick Power Station (LPS).
- Enable the provision of ancillary services from a wider range of customers on Shetland.

In order to meet these objectives an innovative Active Network Management (ANM) scheme is being deployed to oversee and co-ordinate the operation of new controllable DDSM devices. New products supplied by Glen Dimplex will replace the existing storage heaters and immersion heaters in selected homes on Shetland. The installation will proceed in stages over two years starting in early 2013. The total number of homes involved represents approximately 2 MW of electrical demand and 20 MWh of thermal energy storage. Enhanced controllability of the new heaters will enable sophisticated scheduling of power consumption; a significant technological advance over the radio teleswitch system presently used on Shetland for scheduling. Enhanced controllability will also make it possible for the heating loads to respond to changes in frequency.

The ANM scheme will produce operating schedules and active set-points for the DDSM devices to follow based on load and generation forecasts and present network conditions. Dynamic scheduling is facilitated by the deployment of a balancing algorithm on the ANM platform. The balancing algorithm produces "Day Ahead Schedules" for the storage and immersion heaters using forecasts of their energy requirements as an input. Schedules generated by the ANM scheme seek to meet the forecasted energy requirements of the heaters but by manipulating the timing of this energy (electrical) consumption to enhance overall system operation.

The NINES project is a major initiative and represents one of the most comprehensive and ambitious smart grid projects in the world [1]. DDSM is central to the whole concept and a smaller trial of this technology in six homes has provided valuable insight into the practicalities of implementation. This paper describes the results and lessons learned from the initial six home trial. The architecture and control philosophy adopted for the wider roll out to approximately 250 homes in Shetland is then explained.

DDSM TRIAL

As a precursor to the NINES project, Scottish and Southern Energy Power Distribution (SSEPD), Glen Dimplex and Smarter Grid Solutions (SGS) completed a trial of the new immersion and storage heaters and prototype DDSM control infrastructure in Shetland. This trial was funded as a Low Carbon Network Fund Tier 1 project [2]. This trial tested the performance of the immersion and storage heaters, the associated DDSM controllers and the fundamental principles behind the system.

The primary goals of the trial were to investigate control strategies for the storage and immersion heaters and examine the interactions between the new DDSM devices, their schedules and the occupier of the homes. Secondary objectives included investigating the provision of automatic frequency response from the DDSM devices. The intention was that the new devices would follow a predefined schedule. Individual devices would respect this schedule and the majority of the device energy consumption would be within the allowed schedule periods.

The immersion heaters and controllers were installed in six Lerwick homes in November 2010 and storage heaters were installed in June 2011 [2]. In support of the trial, a central control platform was installed in the SGS offices in Glasgow. A General Packet Radio System (GPRS) cellular communications system connected the central control platform and the Local Interface Controller (LIC) installed in each home. The schedules were sent from the central control platform to each LIC. The LICs hold the schedules and issue set points to the heaters within the homes at appropriate times. The architecture is shown in **Figure 1**.

A schedule is a set of discrete target set point values, each corresponding to a specific time interval. Target set points are specified as a percentage of the rated power of each device. The immersion heaters and storage heaters are expected to consume energy at a rate close to the target set point value, but these values are not binding and can be overridden by the device's local control system.

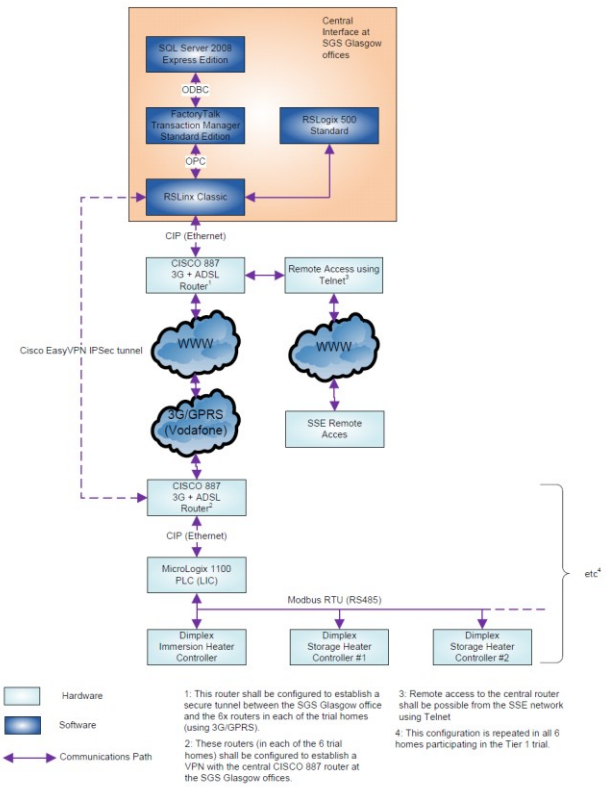

Figure 1: DDSM Trial System Architecture

Control Hierarchy

The immersion heaters use a hierarchical control system to regulate water temperature within an upper and lower temperature limit that ensures user comfort and device safety. Similarly, the core temperature of the storage heater is regulated by its control system to be within a temperature range that ensures user comfort and device safety. Finally, the design of the trial system ensured that the home's inhabitants retained control of the storage and immersion heaters. The inhanitants retain the ability to switch the device off or override the set point with a boost facility. These constraints combine to reduce the degree to which devices follow schedules.

Performance of the Heaters

The results from the trial were variable [2] and the installed devices exhibited a range of behaviours. The results demonstrate that the devices are capable of controlling their power consumption to follow a schedule, but at times actual power consumption will deviate significantly from the schedule. The degree to which the devices deviate from the schedule is dependent on a number of external variables, which include the volume of energy used by the individual customers and the timing of the energy usage. In some cases, the devices do not follow the schedule at all and operate in standalone mode.

Figures 2, and 3 show the performance of a number of immersion heaters over a 48 hour window. In each of the figures, the red dashed line (and pink shading) shows the schedule, and the blue line indicates actual power consumption. In Figure 2 it can be seen that the heater respected the schedule as energy was consumed during the scheduled period only, and the actual power consumption was never above the scheduled level. However, as the scheduled energy consumption of the immersion heater was far greater than what was required, there were long periods where the heater could not match the scheduled target set-point.

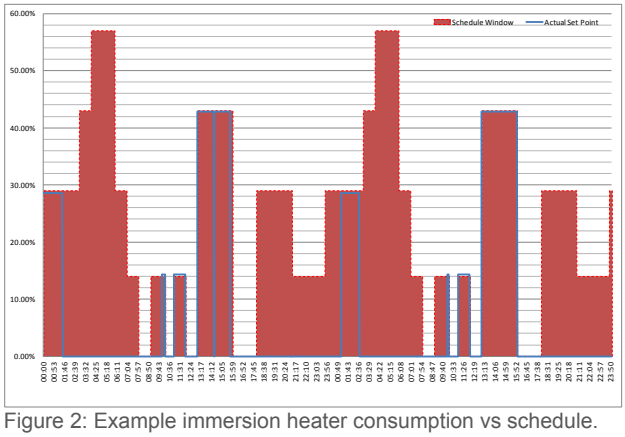

Figure 2: Example immersion heater consumption vs schedule.

In Figure 3 the scheduled energy consumption of the immersion heaters did not match what was required, resulting in the heater breaching the schedule set points and consuming energy outside of the scheduled periods.

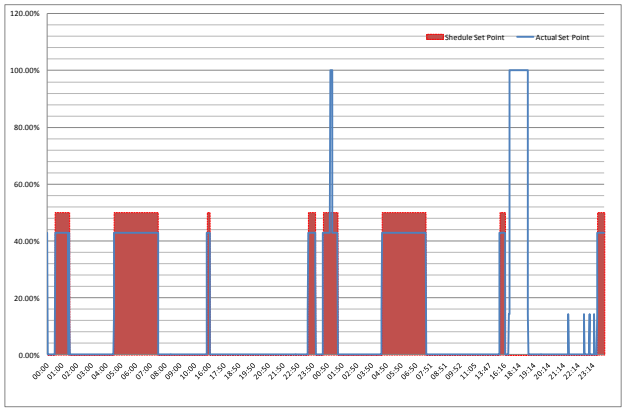

Figure 3: Example immersion heater consumption vs schedule.

Figures 4 and Figure 5 show the performance of two storage heaters over a 48 hour window. Although the results are inconclusive they do appear to show that the devices are capable of following the schedule. However the degree to which the devices follow the schedule and respect the target set points is variable.

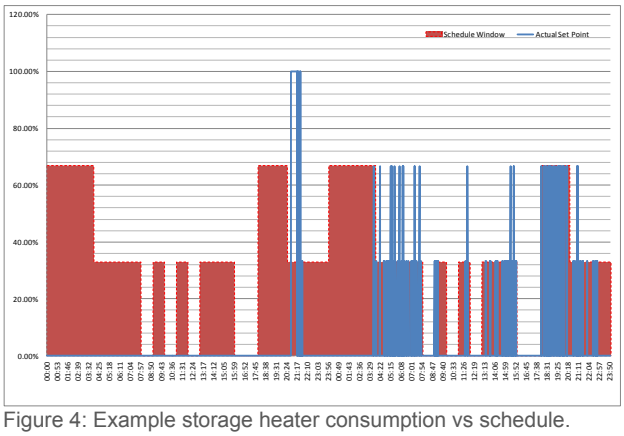

Figure 4: Example storage heater consumption vs schedule.

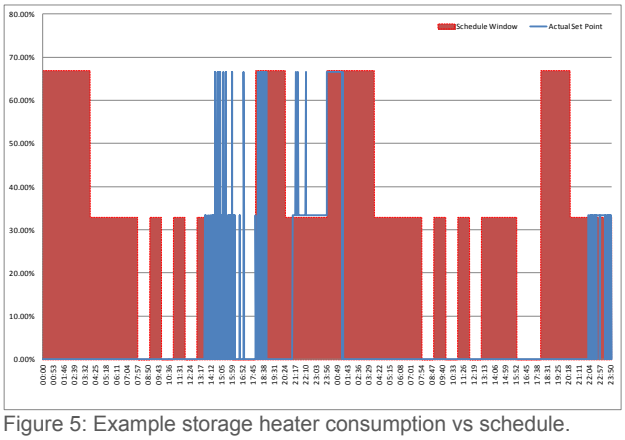

Figure 5: Example storage heater consumption vs schedule.

System Perfomance

The first significant result from the trial is that GPRS proved unsuitable for this project. The communication link between the central interface and each of the LICs needs to be available at all times for transferring schedules and set points or for collecting telemetry data from homes. The GPRS network on Shetland did not provide this level of availability. This had a direct impact of the data available for analysis and the time available to trial further operating schedules.

However, testing demonstrated the successful integration of the DDSM components and suitable control back to the central control platform. Functional elements tested to prove the integration of the technologies included: control of the heaters with a daily schedule, implemented through the LIC; the ability to remotely update these schedules from the central control platform; to remotely override these schedules, in real-time, with active setpoint instructions; the ability to remotely update frequency response characteristics to the Dimplex controllers; and finally the retrieval of data from the Dimplex controllers, via the LIC, and into a remote historical recording system.

This data was used to analyse the performance of the DDSM system; to assess the extent to which the storage and immersion heaters behaved as expected during this trial. The purpose of this analysis was to identify system requirements which may be needed and provide an initial assessment of the energy efficiency and storage capabilities of the devices. This will input to further academic work on modelling household energy use to forecast customer demand. For NINES, the University of Strathclyde will create a 'Demand Forecasting' model to estimate flexible heat demand for the system and establish constraints relating to end user amenity through high resolution end use heat flow models. Data from this trial will be used in the initial calibration of this model.

While integration has been achieved, analysis recommended that design aspects relating to the hierarchy of control logic should be examined in more detail and refined as part of the control system design for the large scale roll out in Shetland. This would maximise the DNO's demand side management capability while maintaining user comfort.

DDSM EXTENSION

Throughout 2013 new storage heaters and immersion heaters will be deployed in 234 homes owned by Hjaltland Housing Association. In order to support the extension of DDSM on Shetland, a high availability ANM platform has been deployed in Lerwick Power Station and a novel balancing and scheduling algorithm is under development.

Platform

The platform required for ANM has been installed in Lerwick Power Station. The ANM platform consists of a core application host and a communications hub for data routing and translation. These are implemented in a dual redundant fashion using commodity hardware. The hardware is distributed across two locations within Lerwick

Power Station with each installation supplied by battery-backed power supplies. A graphical representation of the deployed NINES ANM scheme is shown in Figure 6. The deployed architecture allows two-way communication between the ANM scheme and controlled devices.

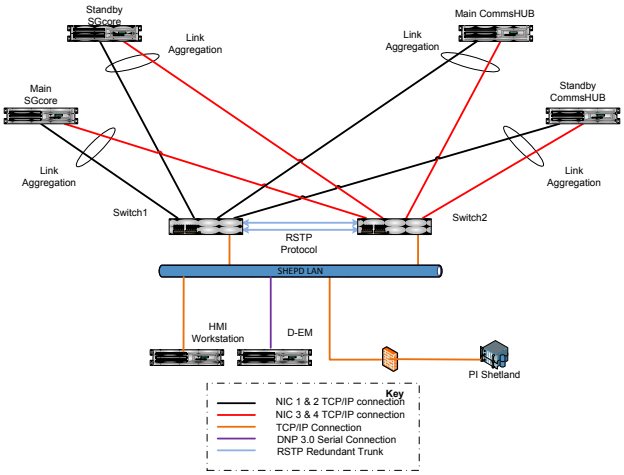

Figure 6: ANM Deployed Platform

In early 2013 a DDSM Element Manager (D-EM) will be installed to manage communication between the Central ANM Controller and all of the new DDSM controlled devices. There will be up to ten individual devices in each home, which will connect to a single LIC in each home. Communication between the DDSM devices and the central ANM platform will be via a radio frequency (RF) communications system co-hosted on Shetland's existing terrestrial trunked radio (TETRA) infrastructure. The D-EM will manage controlled devices in groups. Each device will be assigned to a group according to its type, customer choice, tariff, and payment method. For a given group, which may contain many devices, the same schedule will be issued to LICs for implementation on all devices in that group.

Real Time and Schedule Calculations

The ANM applications for NINES must perform scheduling of controllable demand and management of frequency stability by adjusting to the real-time generation conditions observed. The ANM software determines the real-time limit on ANM-controlled generation on Shetland and may also curtail generation as required. This limit is also used by the balancing and scheduling algorithm to estimate the expected curtailment of generation in the forthcoming period and thereby schedule controllable demand to minimise that curtailment.

Before the trial it was intended that the frequency responsive capabilities of the DDSM loads would contribute to frequency stability on Shetland and dispatch of these loads would allow more renewable generation to connect to the Shetland distribution network [3]. At present there are too many uncertainties associated with the operation of the frequency responsive element of the DDSM devices and any impact the DDSM devices have on frequency stability is considered fortuitous and will not be claimed to allow more generation to connect. This may change once additional device development, modelling and testing is completed.

Controllable Demand Forecasting

In order to improve the performance of the Shetland ANM scheme the scheduling algorithm will use feedback from the installed immersion and storage heaters to improve forecasting of their energy requirements. The Glen Dimplex heaters will supply an indication of their required energy (the "Daily Energy Requirement" or DER), calculated at midnight each day for the forthcoming 24 hours. The D-EM will retrieve data from the devices and aggregate these values to determine how much energy each group requires in the next schedule period. The scheduling algorithm will use this improved forecasting to generate schedules that better match the (thermal) energy requirements of the controllable demand, whilst still manipulating the times at which the (electrical) energy is consumed to enhance overall system operation, i.e. maximise the use of renewables and smooth the output of LPS.

CONCLUSIONS

The results from the trial have provided significant learning for the NINES project regarding the interaction between the new DDSM devices, their schedules and the occupiers of the homes. The results demonstrate the new DDSM devices do not always follow the scheduled set points. It is judged that this is a normal behaviour and a significant proportion of the devices will deviate from the schedules as the devices are rolled out to the 234 houses. Over the population of installed devices it is expected that the schedules will be the dominating factor in determining the aggregated consumption of energy from DDSM devices, but due to the individual energy requirements of the occupants there will be significant deviations within the population. The design of the balancing and scheduling algorithm must account for the deviation between the expected DDSM consumption and the actual DDSM consumption. This learning from the initial trial has been considered in the development of the control and communication platform and balancing and scheduling algorithms developed for NINES.

REFERENCES

[1] C. Foote, R. Currie, F. Clifton, S. Reid, "The Shetland Island Smart Grid", CIRED 2011, Frankfurt

[2] N. Coote, D. MacLeman, "SSET1003 SHEPD Low Carbon Networks Fund Tier 1 Project Close-Down Report"

[3] M. J. Dolan, G. W. Ault, D. F. Frame, S. Gill, *et al*, "Northern Isles New Energy Solutions: Active Network Management Stability Limits", IEEE Power and Energy Society Innovative Smart Grid Technologies (Europe) 2012, Paper No. 378