NEW PROTECTION SCHEMES BASED ON NOVEL CURRENT SENSORS FOR UP-TO-DATE GRID

Ljubomir A. KOJOVIC
Eaton Corporation – USA
E-mail address: ljubomirAkojovic@eaton.com

ABSTRACT

This paper presents novel solutions for protection, control, and metering in electric power systems using Rogowski coils as current sensors. Presented solutions include advanced differential protection systems for power transformers, power cables, and capacitor banks. Also, unique systems that effectively integrate protection, control, and metering functions were developed and successfully implemented.

INTRODUCTION

Rogowski coils provide improved solutions because they accurately measure currents under all operating conditions, they are linear (cannot saturate), they are compact in size, and weigh many times less than conventional iron-core current transformers (CTs). The same Rogowski coils can be used to perform metering, control, and protection functions. Additional benefits when using Rogowski coils are that they can be connected in a non-standard method such as connecting coils in-series to sum their output signals or to provide signals to multiple devices.

Integrated Protection Systems

Integrated protection systems were developed and implemented for comprehensive protection in substations [1]. Rogowski coils may have the same design and scale factors for protection, control, and metering functions, which simplify project designs. Figure 1 shows a system that provides electric power to two electric arc furnaces (EAF). The design for EAF 2 is identical to EAF 1. The presented system efficiently integrates differential protection of the EAF power transformers, differential protection of power cables, electric arc regulation, and metering. Rogowski coils RC2 and RC3, and Relay 3 provide differential protection for the EAF transformer. In addition, RC4 provides sensitive overcurrent protection for any fault involving the transformer tank. Transformer tap position provides high protection sensitivity, detecting low-fault currents without jeopardizing the scheme security. Power cable differential systems were implemented by adding a set of Rogowski coils (RC1) in the substation around the circuit breaker bushings, mounted in similar fashion to conventional CTs. At the other end of the cables, the EAF transformer primary-side sensors (RC2) were utilized to share signals for both the cable and EAF transformer differential protection systems. One relay was added on both ends of the cables (Relay 1 and Relay 2). The Rogowski coil-to-relay interface are tested pre-connectorized twisted-pair shielded signal cables; resulting in easy installation and prevention of wiring mistakes. The relays communicate over fiber-optic cables connected to Ethernet switches exchanging current phasor information. The same fiber-optic cables also serve for remote access to the relays for performing setting changes, event file upload, and other relay observations. The differential protection system uses the GOOSE messaging system over Ethernet for peer-to-peer communication. For reliability, the communication system is dual-redundant; each relay has two independent, single-mode fiber-optic Ethernet ports (100 Mbps) interconnected via two Ethernet switches. The switches manage communications between the relays as well as the Ethernet traffic between the substation and the local area network inside the facility.

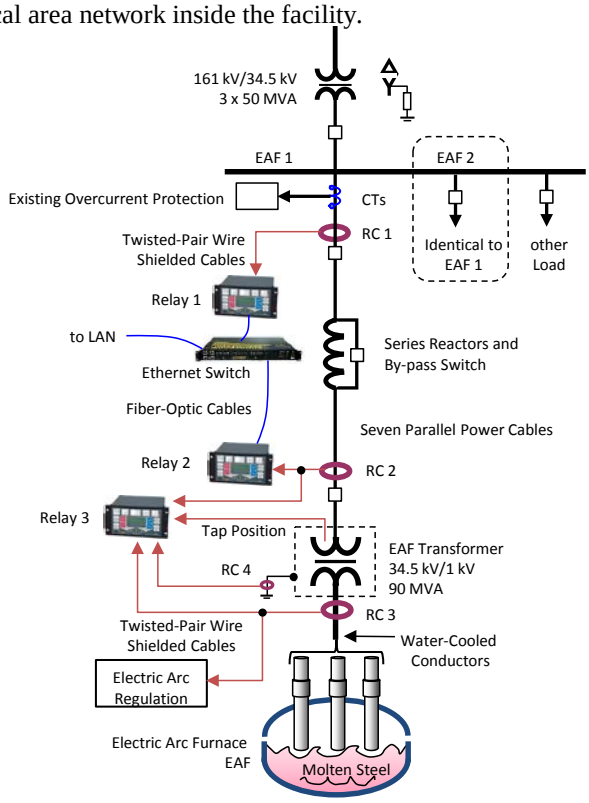

Figure 1 Integrated Protection, Control, and Metering Functions

The cable differential protection system settings are similar to most differential types of systems. The settings include a minimum trip level in differential amperes and a percentage differential slope characteristic. With the Rogowski coil current sensor, a lower slope is normally selected (as compared to CT-based systems). The protection scheme has

logic that can be enabled to compensate for the charging current of the cable or line (when charging currents are high they would be seen as In-Zone faults by the protection system).

Another unique solution of this design is that Rogowski coils (RC3) share signals for differential protection of the EAF transformer and for electric arc regulation that provided more efficient EAF operation. The same sets of Rogowski coils used in these projects also perform all metering functions such as measurement of currents, electric power, harmonics, and THD factor.

High-Voltage Power Cable Protection

Differential protection systems for power cables presented here were developed and implemented to provide two different protection functions. One is to operate for an In-Zone fault and trip circuit breaker to isolate the faulted cable. The second is to supervise the auto reclosing function of the main protection. This was implemented in cases when limited rights-of-way in populated areas prevent delivery of electric power to substations via overhead transmission lines. This situation requires transition from overhead lines to power cables for power delivery to urban areas [2]. To ensure reliable power supply, protection systems must differentiate between cable and overhead transmission line faults. For example, after operating for a line fault, the main protection system may initiate auto reclosing only after positive confirmation that there is no fault in the power cable.

Differential protection of power cables use Rogowski coils and one relay at each end of the protected cables as shown in Figure 2. Rogowski coils are interfaced to the relays by twisted-pair signal cables that are heavy-duty double-shielded to minimize the impact of switching transients and for mechanical strength. In some project implementation, relays communicate over a Synchronous Digital Hierarchy (SDH) network. The relay's Ethernet port is interfaced via a fiber-optic cable to a serial converter that manages local Ethernet switching at up to 1 Gbps over serial services.

In other projects, the relays communicate over dedicated fiber-optic cables connected to Ethernet switches exchanging current phasor information to determine if a fault is on the cable (In-Zone) or somewhere in the power system (Out-of-Zone). The same fiber-optic cables also serve for remote access to the relays.

High-precision Rogowski coils used in these projects are implemented on printed circuit boards (PCBs) in a split-core style permitting easy installation without opening primary conductors. Figure 3 shows Rogowski coils installed below a 275 kV bushing connected to a 2 km power cable. The protective aluminum shroud and heavy-duty signal cables are clearly seen.

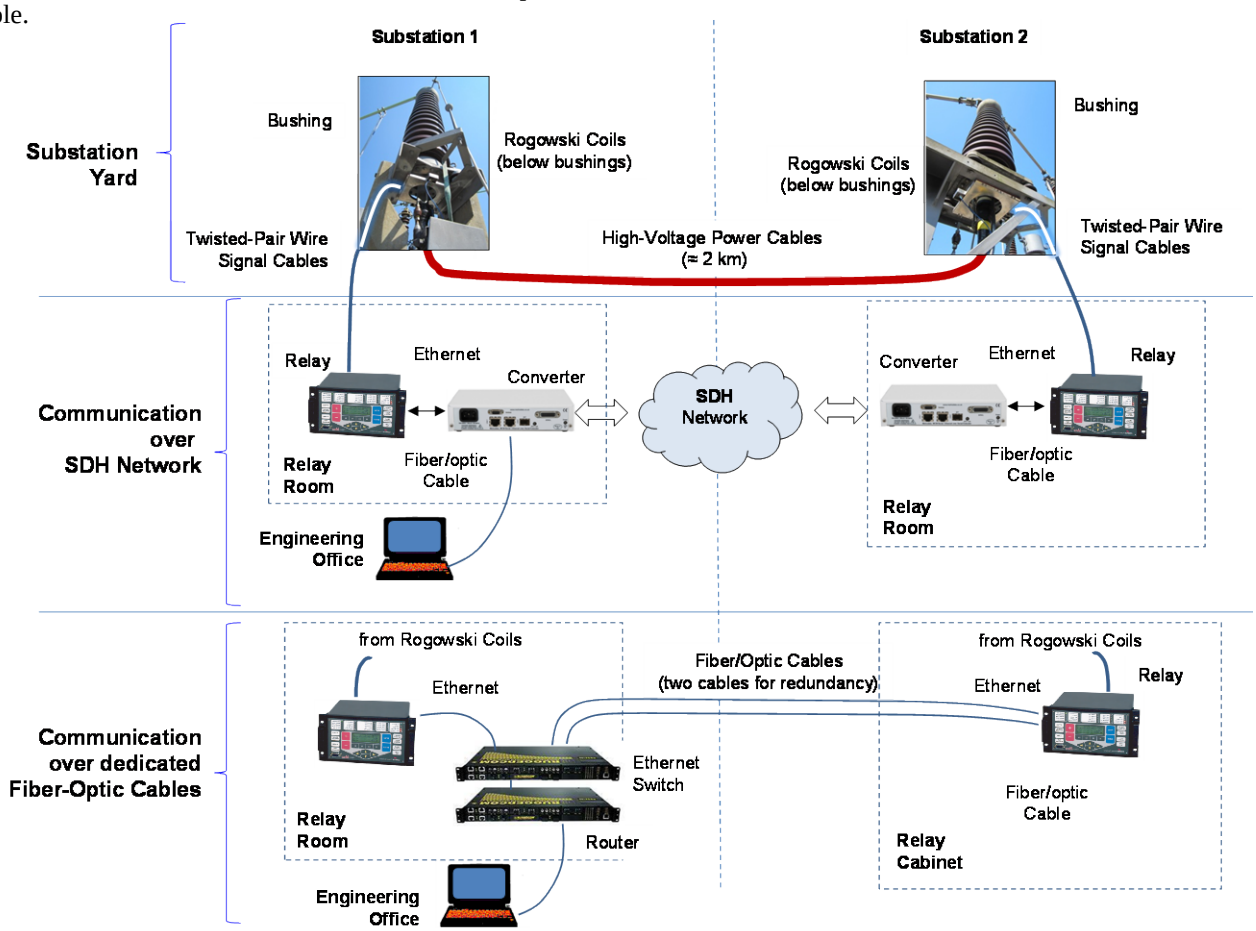

Figure 2 Differential Protection of High-Voltage Power Cables

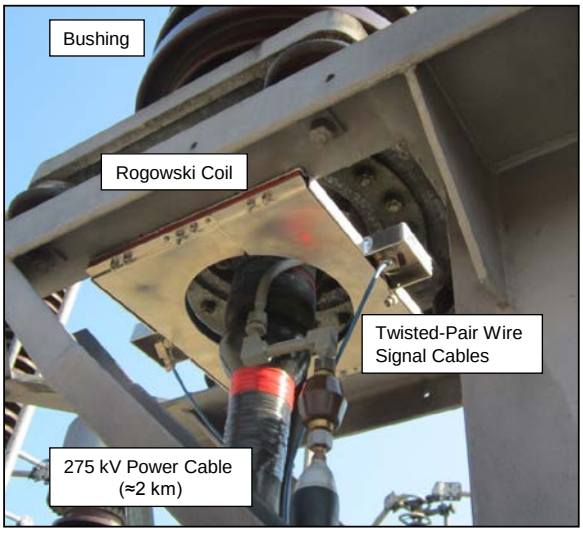

Figure 3 Rogowski Coil Installed below Bushing

Capacitor Bank Protection

This section presents an advanced solution for differential protection of capacitor banks [3]. The system was installed on a 60-kV, 30-Mvar capacitor bank that is ungrounded wye-wye split design, assembled in racks. Previously adopted solutions for capacitor bank protection were based on monitoring unbalanced currents between two wye neutrals. The Utility identified the need to look for an alternative to the neutral CT protection system after several catastrophic failures of the CTs. The Utility's engineers had already established very good experience with Rogowski coil-based protection systems on previous projects and determined that Rogowski coils possess performance characteristics that solved the problem. The new system was developed and extensively tested in the high-power and impulse-current laboratories and confirmed successful performance. The installation and commissioning tests were also successful, which gave the Utility operating personnel the confidence that the new Rogowski coil capacitor protection system will provide an advanced level of protection compared to the traditional neutral CT-based protection. An important safety aspect of Rogowski coils is that they cannot catastrophically fail under any operating conditions including heavy-current faults that would cause conventional CTs to catastrophically fail.

Existing Design

The capacitor bank is a wye-wye-split design as shown in Figure 4. The capacitor bank size is 30 Mvar and the voltage level 60 kV. It is installed in a 220 kV/ 60 kV substation. Maximum short-circuit current at the capacitor bank location is 26.7 kA with an X/R ratio 20. The capacitor bank units have the following ratings: Rated voltage 12120 V; Rated size 250 kvar; seven capacitor units in parallel; and three capacitor groups in series. The existing capacitor bank protection is based on overcurrent and overvoltage functions. There are three CTs installed in each phase at the 60 kV side, providing conventional overcurrent protection. Protection of the capacitor bank units is based on overcurrent protection, sensitive to the current measured by the unbalance CT installed in the neutral between the two capacitor bank branches. The CT ratio is 10/1.

There are two main disadvantages of the existing capacitor bank protection solutions. First, for a phase-to-phase fault within the capacitor bank, high current can flow through the unbalanced CT, causing it to explode. When this happens, significant damage may result in the capacitor bank. Second, when a fault occurs inside a capacitor unit there is no phase fault segregation and it may take time to locate the faulted capacitor unit. This is a significant issue since, in the worst scenario, the six capacitor branches have to be checked before discovering the faulted unit. The time consumed during repair has a tremendous impact on the availability of the capacitor bank. Being able to segregate the faulty phase, the failed capacitor unit can be located 3 or even 6 times faster than without phase segregation.

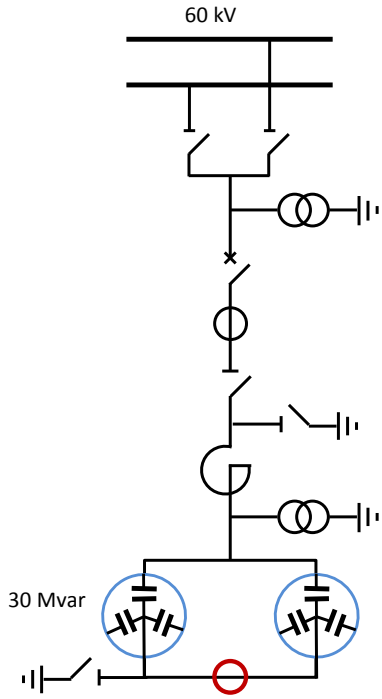

Figure 4 Capacitor Bank Circuit Connection

New Design

Figure 5 shows the new solution for capacitor bank protection, based on Rogowski coil current sensors. Rogowski coils are installed in each leg of the three phases of the capacitor bank. This requires six coils. Two coils of the same phase measure currents in two capacitor branches and the relay derives the differential current. When current exceeds the preset values, the relay sends an alarm/trip signal.

Rogowski Coils are designed using two PCBs sandwiched together as a multi-layer PCB design (see Figure 6). This design provides high accuracy of the coils. The coils are encapsulated and protected by aluminum shrouds. Diameter of the encapsulated coil from Figure 6 is 165 mm to achieve light weight and compact size for easy installation on the capacitor bank structure. The coils are designed for a low-voltage insulation level. To satisfy 350 kV BIL, the coils are interfaced to the relay (located in the control room 300 m from the capacitor bank) using a fiber-optic system. The Remote Unit of the fiber-optic system is installed at 60 kV

voltage level and performs analog-to-digital conversion of Rogowski coil output signals. The Ground Unit, which is installed in the control room, reconstructs the analog signals for use by the relay. Figure 7 illustrates the installation of Rogowski coils at the capacitor bank structure close to the Remote Unit. The Rogowski coils are connected to the Remote Unit by twisted-pair shielded signal cables.

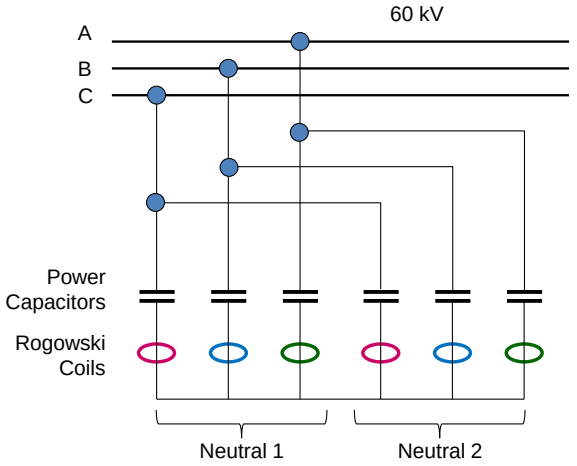

Figure 5 Capacitor Bank Protection based on Rogowski Coils

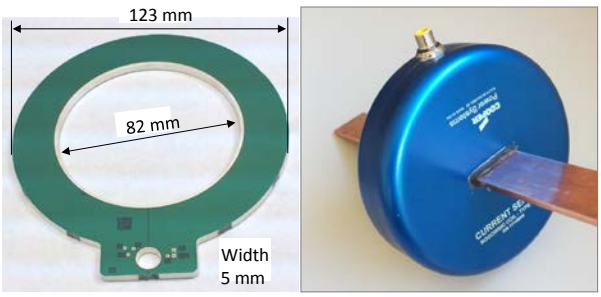

Figure 6 Rogowski Coil Design

Prior to installation, extensive tests were performed to verify the overall system performance. Test sets were performed to confirm the scheme dependability and security. Tests included: (1)-Measurement of the Rogowski coil output signals (scale factor); (2)-High-Power Tests: Energizing capacitor bank (to verify the scheme security and stability), Alarm tests, Trip tests at different capacitor unit failure levels; (3)-Impulse-current tests; and (4)-Acceptance and commissioning tests. Installation commissioning was performed in May 2012, and confirmed that the capacitor bank protection system, based on Rogowski coil current sensors, operates reliably — providing both high dependability and security.

Significant advantages emerge when comparing Rogowski coil-based protection schemes with CT-based schemes. Rogowski coils offer the following benefits:

- Linearity, no saturation provides excellent protection security even at high fault currents exceeding 100 kA;
- Light weight and compact size;
- Increased personnel safety since opened secondary wiring during operation does not result in hazardous voltages; and
- Easy installation without the need to open primary conductors owing to the coil's split-core design.

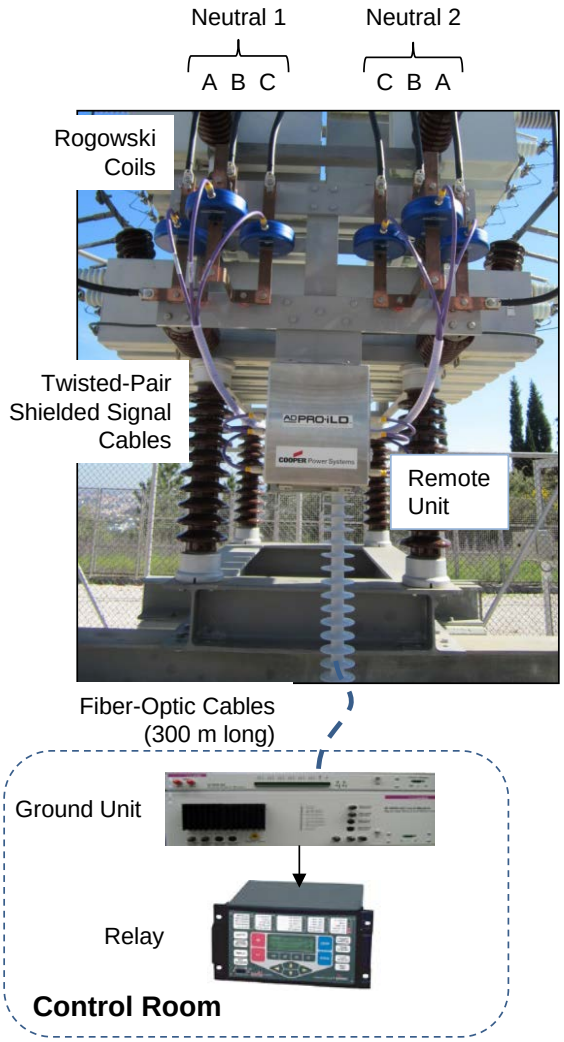

Figure 7 Capacitor Bank Protection System

REFERENCES

[1] Lj. A. Kojovic, "Integration of Protection, Control, and Metering Functions", 44th CIGRE Session 2012, Paris, France.

[2] A. dos Santos, J. F. Martins, P. Monteiro, Lj. A. Kojovic, T. R. Day, "Experiences with Protection of Combined Overhead Line/Cable Circuits based on Non-Conventional Current Sensors", CIGRE B5 Colloquium, Lausanne, Switzerland, September 12-17, 2011.

[3] A. dos Santos, J. Lourenço, J. F. Martins, P. Monteiro, Lj. A. Kojovic, "Current Sensors for Improved Capacitor Bank Protection", International Conference on Developments in Power System Protection – DPSP 2012, Birmingham, UK, 23-26 April 2012.