A CONCEPTUAL STUDY OF SYSTEMS ARCHITECTURE FOR DECENTRALISED TOPOLOGY INFERENCE OF DISTRIBUTION NETWORKS

Nicholas HONETH
KTH – Sweden
nicholash@ics.kth.se

Arshad SALEEM
KTH – Sweden
arshads@ics.kth.se

Lars NORDSTRÖM
KTH – Sweden
larsn@ics.kth.se

ABSTRACT

Power system operation and control relies heavily on models for decision making. Determining the topology of electrical distribution networks is a critical part of producing these models and maintaining up-to-date topologies is a resource consuming and challenging task. This paper provides a conceptual study of a methodology and supporting system architecture for real time inference of electrical topology using process and model data from IEC 61850 compliant substation automation devices .The conceptual study aims to provide a discussion of the performance and scalability of such systems based on an analysis scenario. The decentralized topology inference system concept forms the basis for future work in operation and management of active distribution networks accommodating larger integration of distributed energy sources of intermittent nature.

INTRODUCTION

Sustainable energy systems require integration of sustainable energy sources which are typically of intermittent nature and smaller size. Efficient operation of such a system requires new methods for intelligent and real-time monitoring and control functions.

In this work we analyse a scenario where a previously proposed method and architecture for decentralized inference of dynamic network topology in analysed. The architecture aims to support *plug-and-play* integration by utilizing standardized information exchange services with substation automation equipment from which it can ascertain local substation configurations thus minimizing the reliance on prior models. Such a system could handle dynamically changing topology efficiently.

Three main aspects can be identified as motivating this work.

Firstly, in the drive for a more sustainable energy mix, power systems around the globe are seeing an increased trend in the penetration of distributed generation (DG), typically from non-dispatchable Renewable Energy Sources (RES) resulting in power systems with more dynamic topologies than today requiring new techniques in topology processing.

Secondly, the de-regulation of the power industry makes the operation and control of the grid a shared responsibility among several stakeholders. A plug-and-play integration providing value-added functionality that supports grid model management may be able to cope with the challenging issue of managing many stakeholders.

Thirdly, current, power system topology is generated from status of breaker positions together with a static model of the grid [1]. This approach makes the resulting topology prone to errors [2]. To reduce the reliance on error prone static models, it would be advantageous to design a mechanism that can determine topologies with a minimum prior knowledge of the system.

SCOPE AND LIMITATIONS

This paper provides a discussion of work previously presented in [3] and, building on the proof-of-concept results from [4], aims to provide a concise coverage of previous and as well as a short analysis and discussion of the scalability of the topology inference concept. For a detailed specification of the algorithms implementing the methodology the reader is referred to [3] whereas [4] provides an in-depth discussion on the aspects concerning process measurement and data handling.

DECENTRALIZED TOPOLOGY INFERENCE SYSTEM ARCHITECTURE

Three main components are required to realize the proposed

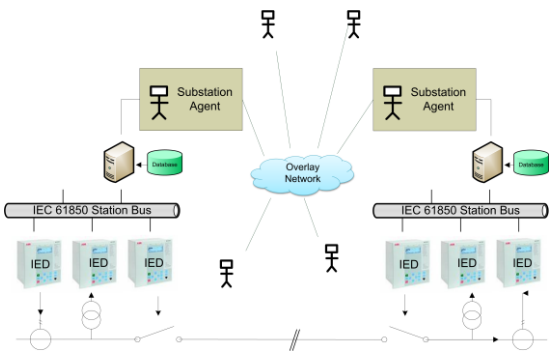

Fig 1. Architecture of Topology Inference Concept

functionality, namely, multi-agent systems, substation automation systems and overlay networks.

Firstly, Multi-agent systems (MAS) are systems consisting of more than one software agent. A system architecture based upon MAS provides a natural way of decomposing a software system into subsystems and to model interactions between these subsystems and individual components (agents) within the subsystems.

Secondly, the IEC 61850 standard for Substation Automation Systems (SAS) specifies a set of

communication protocols for exchanging information as well as a data model for determining the structure and syntax of the process monitoring and control data.

There has been much interest in integrating IEC 61850 SAS into intelligent control systems for power system control [5] . In this context MAS is a concept commonly applied [6] . The Substation Configuration Language (SCL) defines well-structured configuration descriptions of substation equipment. If used as part of an agent ontology, common models of the local substation structure and functionality can be used for structured information exchange between agents. IEC 61850 also specifies the protocols and conventions for time synchronization for comparing measurements at different points in the network as required by the method presented here.

Thirdly, overlay networks provide value-added communication capabilities such as reliable delivery, encryption, authentication, announcing of nodes entering or exiting the network, directory listing and structured multicast [7] [8] . The overlay network is assumed to provide the capabilities listed above to satisfy the information exchange requirements of the topology inference method.

METHODOLOGY

The methodology used to collect information about the electrical topology of an electrical power network is based on the ability of a substation agent to ascertain the local structure of its own station from the local SAS. The station agent will exchange collected process information with other station agents that it can communicate with to infer the electrical connectivity with other substations.

Firstly, a newly started station agent queries the local SAS using the Manufacturing Message Specification (MMS) queries as specified in IEC 61850-8 to populate its ontology instance with model data in the local station. This means that it is able to distinguish between the bays and voltage levels within the substation to categorize available process. The agent will subsequently announce its presence to other agents which it can communicate with on the overlay network. The announcement will include information about the substation geographical location as well as name, voltage level and status of each bay in the substation.

Figure 2 illustrates how each agent maintains a table called an incidence certainty matrix. There exists a row in the matrix for each local bay which can be associated with one or more foreign bays that with some probability could be connected to the local bay. This probability is called an *incidence certainty*.

An incidence certainty threshold is defined as the incidence certainty level required for verifying an electrical connection. An entry with an incidence certainty above the threshold is considered to be electrically connected and can be added to the local topology model of the electric power network.

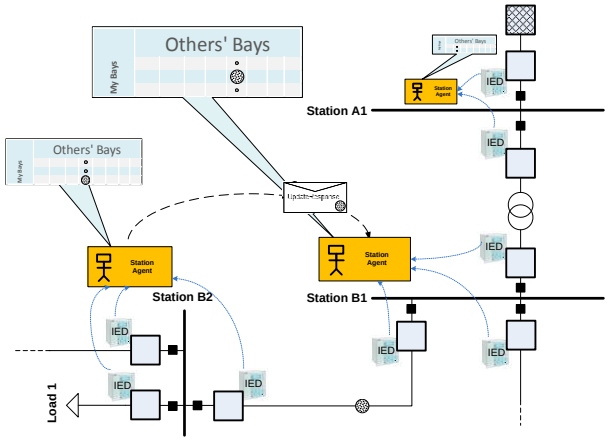

Fig 2. Shows a response message from B2 to B1 with *an incidence certainty* of the connection between them based on *fingerprint* data.

Each station agent must populate its incidence certainty matrix. It does this by taking a series of time-stamped process measurements, called a *fingerprint*. A fingerprint for a bay is sent as a query message to other station agents on the overlay network. When station agents receive queries for bays that are electrically compatible with one or more local bays, time series correlations of the remote and local fingerprints are performed which results in a correlation value, the incidence certainty. This value approaches 1 as the fingerprints approach an exact match. The incidence certainty for the two bays is updated in the station agent's local incidence certainty matrix and returned to the querying station agent as an incidence certainty response.

A decay of incidence certainties is defined to ensure that the electric topology model is maintained in the most reliable and recent state. The affected parts of the topology can thus be refreshed according to the parameters of the decay function.

In order for partial or complete topology to be collected and exported for use in operation and network management, incidence certainty data must be disseminated amongst the agents on the overlay network. The mechanism used for dissemination of incidence certainty data could utilize a gossip protocol [9] [10] [10] for propagating the topology amongst agents on the network allowing a fresh topology to be collected quickly and reliably while minimizing communication network load and indeterminism.

Distributed database techniques are applied to collect snapshots of the incidence certainty superset and thus the topology for the time interval between the oldest and newest incidence certainty data tuples in the set.

An agent acting as a *spokesperson* should be able to export the topology in a standard format such as IEC 61970-310 Common Information Model (CIM) [1] which can be imported by SCADA or other relevant systems.

CONCEPTUAL STUDY SCENARIO

The scenario presented in this paper is as follows: We consider a meshed distribution network as shown in figure 3 below which has several units of distributed generation and loads connected. There are several secondary distribution stations each with a substation-local agent process implementing the topology inference scheme.

Analysis of scalability and performance

The analysis of the conceptual study aims to provide a basis for conclusions regarding the performance and scalability of topology inference systems on large networks. We define the limit of a scalability system as the size of the system at which the system will become technically and economically infeasible. This study is limited to considering information exchange and therefore the bandwidth of the communication network required is the primary technical and economic limiting factor.

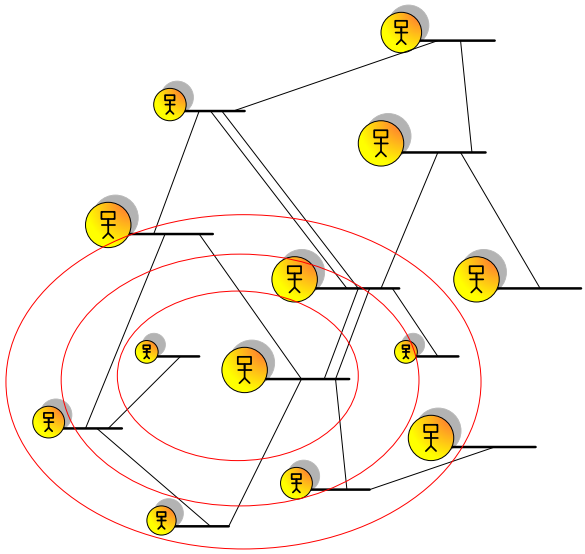

Fig 3. Illustrating the expanding geographical query radius (red) overlaid on a bus-branch network model.

In terms of performance the primary concern is the amount of information exchanged, and hence the time, required for the topology inference algorithm to converge on a result. The system should at least outperform existing topology processing methods in order for it to be considered useful for day-to-day operations. We therefore consider performance from two aspects: firstly, a cold-start state (not necessarily a black start of the grid but at least of the topology inference system), and secondly, the performance of an update in the event of a change of topology.

Scalability for plug-and-play topology inference

Consider a large meshed urban distribution network where the majority of secondary stations have been equipped with IEC 61850-enabled monitoring and control IEDs as well as a link via a communications network, most likely a leased private network provided by a 3rd-party telecommunications operator. In the event that there are thousands or tens of thousands of such substations it should be clear that exchanging process data between all substations, even in a peer-to-peer fashion, would be infeasible as is would have unreasonably costly bandwidth requirements. For this reason the topology inference system should be geographically-aware and also only exchange information with substation agents connected to substations operating at the same voltage levels.

The algorithm requires all neighbour candidates to exchange process data fingerprints with one another meaning that the information exchange complexity is of order $O(n^2)$. The quadratic rate of increase of process data fingerprints to exchange as the number of nodes (substation agents) increases is not desirable in terms of scalability. Various strategies could be considered to minimise this factor. The expanding geographical radius of other stations queried is the approach proposed in [3][4]. Figure 3 illustrates how the choice of the rate of increase of this geographical radius becomes importance when trying to limit the rate of increase of substation agents to query in large systems. Should the rate of increase of geographical query radius be such that there is a quadratic decrease with increased distance, a pseudo-linear rate of increase of substation agent node to query could be maintained.

Another strategy could be to supply substation agents with a basic level of prior knowledge of the topology in the form of a bus-branch model of the network. Equipped with this information, substation agents would be able to make informed first attempts when querying other substation agents.

Scalability factors during operation

Where the connectivity is already known in the form of a bus-branch model, the indeterminism on the communication network for information exchange can be decreased significantly. This model could either have been determined by the plug-and-play methods discussed above or have been provided as a priori configuration data.

The reduction of the indeterminism of the volume of information exchanged is due to the fact that each substation will have a known set of electrical neighbour substation agents with which it will regularly exchange process data fingerprints. Under steady-state operation the periodicity of the fingerprint updates can be tuned by adapting the rate of incidence certainty decay according to a bandwidth allowance and the number of neighbours it is exchanging fingerprint data with. In the case where events are observed which would indicate a possible change to the electrical topology and require an update of the of the local and neighbouring process data, the updates can be prioritised and throttled based on bandwidth allowances similarly to how they are described above.

The deterministic utilisation of communication network resources means that the rate of increase of information exchange, and hence net bandwidth required, means that the

communication requirements would basically follow an interconnection density determined by N – the number of substations and M – the average number of interconnections between substations leaving the information exchange proportional to N x M for a specific geographical area. The regional dependence on N and M also means that the total number of substation agents participating in the topology inference scheme does not limit the scalability of the system, this is the primary benefit of the distributed architecture paradigm.

FUTURE WORK

An empirical study using the prototype implementation from [4] integrated with a simple electrical process simulation for varying values of N and M would provide a sound empirical basis for the conclusions of the analysis above. Such and empirical analysis would be the next step on the track discussed in this paper.

CONCLUSIONS

This paper provided a discussion of the aspects affecting the scalability and performance of systems implementing the topology inference concept. The analysis was discussed in terms of two phases of operation namely, on first execution or cold-start, and the system under normal operation.

The key factor affecting the scalability of such systems is the fact that the required information exchange would by nature be concentrated to a limited geographical area. Substations agents would need to be geographically aware and the strategy of querying other agents within a pseudo-linearly increasing set of neighbour candidates was discussed.

The primary advantage that the required information exchange is independent of the total number of substation agents participating in the scheme motivates the analytical conclusion that where systems perform well locally they should scale well on a large scale.

ACKNOWLEDGMENTS

The work is undertaken within a joint development project at HVV (www.highvoltagevalley.se) and financed by the Swedish Governmental Agency for Innovation Systems.

REFERENCES

[1] *IEC 61970-301 Common Information Model Base*, IEC standard 61970-301, 2003.

[2] W. L. Rutz, M. L. Oatts, T. B. Murib, J. Britton, J. Resek, R. B. Knode, R.Yaseen, V. Ruhela, and D. F. Hacketi, “Critical issue affecting power system control center databases,” IEEE Trans. Power Syst., vol. 11, no. 2, pp. 923–928, May 1996.

[3] Honeth, N.; Saleem, A.; Kun Zhu; Vanfretti, L.; Nordstrom, L.; , "Decentralized topology inference of electrical distribution networks," *Innovative Smart Grid Technologies (ISGT), 2012 IEEE PES* , vol., no., pp.1-8, 16-20 Jan. 2012

[4] Honeth, Nicholas; Saleem, Arshad; Nordstrom, Lars; , "Process data comparison for topology inference," *Power and Energy Society General Meeting, 2012 IEEE* , vol., no., pp.1-7, 22-26 July 2012 Honeth, Nicholas; Saleem, Arshad; Nordstrom, Lars; , "Process data comparison for topology inference," *Power and Energy Society General Meeting, 2012 IEEE* , vol., no., pp.1-7, 22-26 July 2012

[5] Vyatkin, Valeriy; Zhabelova, Gulnara; Higgins, Neil; Schwarz, Karlheinz; Nair, Nirmal-Kumar C; , "Towards intelligent Smart Grid devices with IEC 61850 Interoperability and IEC 61499 open control architecture," *Transmission and Distribution Conference and Exposition, 2010 IEEE PES* , vol., no., pp.1-8, 19-22 April 2010.

[6] Apostolov, A.; "Multi-agent systems and IEC 61850," *Power Engineering Society General Meeting, 2006. IEEE* , vol., no., pp.6 pp., 2006.

[7] Zhou, S.; Hogan, M.; Ardon, S.; Portman, M.; Hu, T.; Wongrujira, K.; Seneviratne, A.; , "ALASA: When Service Overlay Networks Meet Peer-to-Peer Networks," *Communications, 2005 Asia-Pacific Conference on* , vol., no., pp.1053-1057, 5-5 Oct. 2005

[8] Massoulie, L.; Kermarrec, A.-M.; Ganesh, A.J.; , "Network awareness and failure resilience in self-organizing overlay networks," *Reliable Distributed Systems, 2003. Proceedings. 22nd International Symposium on* , vol., no., pp. 47- 55, 6-18 Oct. 2003.

[9] Deconinck, G.; Labeeuw, W.; Vandael, S.; Beitollahi, H.; De Craemer, K.; Rui Duan; Zhifeng Qui; Ramaswamy, P.C.; Vande Meerssche, B.; Vervenne, I.; Belmans, R.; , "Communication overlays and agents for dependable smart power grids," *Critical Infrastructure (CRIS), 2010 5th International Conference on* , vol., no., pp.1-7, 20-22 Sept. 2010.

[10] Mou, S.; Yu, C.; Anderson, B.D.O.; Morse, A.S.; , "Deterministic gossiping with a periodic protocol," *Decision and Control (CDC), 2010 49th IEEE Conference on* , vol., no., pp.5787-5791, 15-17 Dec. 2010

[11] Boyd, S.; Ghosh, A.; Prabhakar, B.; Shah, D.; , "Randomized gossip algorithms," Information Theory, IEEE Transactions on , vol.52, no.6, pp. 2508- 2530, June 2006.