OPERATIONAL DATA MEASUREMENTS IN INTELLIGENT MEDIUM VOLTAGE NETWORKS

Jeroen VAN TONGEREN
Alliander – NL
jeroen.van.tongeren@alliander.com

Petr KADUREK
TU/e – NL
p.kadurek@tue.nl

Sjef COBBEN
Alliander, TU/e – NL
j.f.g.cobben@tue.nl

Wil KLING
TU/e – NL
w.l.kling@tue.nl

ABSTRACT

Only a few measurements are performed in the distribution networks nowadays. However, the distribution networks will have to handle future challenges, like increasing demands and distributed generation. Therefore, the network needs to be actively controlled and operated, which will require more operational measurements among the distribution network. Those measurements will also be necessary to increase the network utilization. This paper assesses the operational data which should be measured among the MV network to meet the future goals. Firstly, the functionality of future MV network is addressed and the relevant measurements are derived. The simulations are presented to evaluate the most suitable locations for the measurements. In addition, an overview of operational parameters and advisable measurement locations among the MV network is presented.

INTRODUCTION

The MV distribution network is an inevitable part of the power system, providing connection between the customers (in MV and LV networks) and the transmission network. The primary objective of the distribution network is to distribute electrical energy. However, the network has to operate reliably, with an minimum amount of interruptions, and has to provide certain quality of voltage supply to the entities connected. The minimal power quality (PQ) is defined by the standards [1]. The MV network also has to operate economically with reasonable network losses. One of the future challenges for the distribution system operator (DSO) is to find a compromise between the network performance and its costs [2].

The MV networks are going to be challenged by increasing penetration of distributed generation (DG) at MV and LV levels. The amount of power generated by DGs mostly depends on external factors; resources (wind, solar radiation) or heat demand (temperature). The power flows in future MV networks will be more variable and difficult to predict [3], [4]. In addition, distribution networks will have to accommodate increasing electricity demands, which can increase even step-wise due to new technologies like air-conditioning, heat pumps and electric vehicles [2]. To cope with these challenges, the distribution network has to be equipped with more intelligence (including on-line voltage control), remote monitoring and power flow control. For this reason it is necessary to perform operational measurements among the MV network.

The contribution of this paper is the evaluation of necessary operational measurements and the selection of suitable locations among the MV network.

OPERATIONAL DATA

Considering the MV network and the connections to HV and LV networks, measurements can be performed at various locations or points of connection (POC):

1. HV/MV substations.
2. MV/LV substations.
3. POC of the entity connected to the MV network.
4. POC of DG connected to the MV network.
5. MV/MV substations.

To anticipate the impact of future challenges, Alliander (one of the DSOs in the Netherlands) developed a concept of a new MV network structure, which contains a ring of 20/10 kV substations (equipped with sensing and control capabilities) incorporated into the current 10 kV MV structure [2]. A schematic overview of the new 20/10 kV structure is depicted in Fig. 1.

The main functionality of an electric network is to transport electricity in reliable and safe way. To achieve this functionality, following operational aspects should

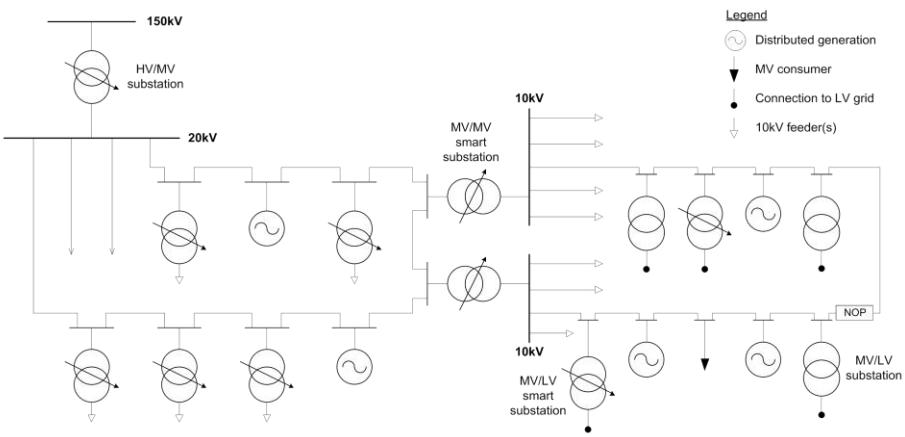

Fig. 1. Schematic representation of the new 20/10 kV network structure with its possible measurement locations.

be taken care of in the MV network (apart from PQ monitoring):

1. Monitoring operational limits of components.
2. Monitoring power flows in the network.
3. Monitoring ageing of components.
4. Maintaining reliability of the network.
5. Remote switching and current re-routing.
6. Fault localization.
7. Automatic fault clearing.

To perform these functions in the network, it is investigated which parameters have to be measured, their locations and the timeframe of those measurements. The most important operational data are voltage levels, current levels and active and reactive power flows. When these parameters are measured at every location, the network operator will have a good overview of the distribution network status. The loading of components (e.g. transformers and cable sections) can be estimated to timely address possible problems during the operation.

To maintain the reliability of the network, the ageing of essential components shall be monitored. The ageing of MV transformers is mainly related to the thermal conditions during operation [5]. Therefore, the most important parameter to measure for transformer performance is the internal insulation temperature.

Transformers have a large thermal time constant and therefore the 150 minutes measurements for oil-insulated transformers (as IEC suggests) are sufficient [6]. However, the time frame of the operational data should be consistent with other measurements and shall be synchronized on 10 minutes basis.

Switchgear and circuit breakers installed at the substation carry the same current as the feeder during normal operation. Current measurements are not necessary at those components. The lifetime of a circuit breaker mainly depends on the number of short circuits it had to clear during operation and the size of the fault currents which it cleared. Therefore, those quantities shall be measured, at HV/MV and MV/MV substations, to estimate the lifetime of a circuit breaker and/or to perform maintenance or inspection.

The control actions available for the MV network and the monitoring in HV/MV, MV/MV and MV/LV substations are:

• Transformer tap changer positions; in the HV/MV substation the tap changer position is continuously adjusted to offset the voltage drop or rise in the MV networks and to keep the MV and LV voltage in limits given by the standard. However, the presence of DGs among the MV and LV network will change the voltage profiles in the MV network, which can lead to large local differences. The on-load tap changers might be installed also at MV/MV and MV/LV substations in the future [7]. The tap positions shall be co-ordinately adjusted and monitored, and also the available voltage range shall be included in the operational data measurements.

• Switch positions in the connected feeders are important for the DSO; they have to be well informed about the actual switch positions in the MV network to quickly respond to faults occurring in the network. The switchgear at the HV/MV substation, at the MV side of the MV/LV substations and at MV/MV substations shall be monitored on-line to provide real-time information to the DSO concerning the switching actions in the MV network.

Furthermore, the location of a fault should be quickly determined to perform repairs in a short time. In the new 20/10 kV MV network, faults can occur in either the 10 kV network (detected on the secondary side of the MV/MV substation) or in the 20 kV ring (can be detected at HV/MV substation) [4]. In both cases, the short circuit currents should be measured to identify the faulted network section and to enable fast voltage restoration. The pre-fault demands and generations at each node should be estimated to successfully define the power re-routing options.

In addition, the conditions of the cables shall be monitored separately during the operation to predict their defects (e.g. partial discharge monitoring can be applied [8]).

VOLTAGE LEVEL

The voltage level is one of the most important quantities for network operation. The MV network has to supply all customers with agreed voltage quality or according to the defined limits. The slow voltage variations are discussed in this section as an aspect of network operation.

The voltage level limits are defined by the standard, where for MV networks with nominal voltages of 1 kV < V_n < 35 kV [1]:

• V_n ± 10 % for 95 % of all ten-minute average values measured of the rms voltage within a period of 1 week.

• V_n + 10 % and - 15 % for all ten-minute average values measured of the rms voltage.

The voltage level fluctuations in MV networks are normally smaller (usually ± 3 % V_n), because also the connected LV networks have to supply the customers with voltages within limits. The declared voltage for MV customers is the voltage level agreed between the customers and the DSO.

The presence of DGs among the future MV networks can change the currently used voltage control scheme. In MV networks mainly wind turbines and CHP installations are connected, while PV systems and µCHP installations are generally connected in the LV network. This can cause a situation in which the generated power in the MV (or LV) network is higher than the power locally consumed, leading to a reversed direction of the power flow (e.g. from LV to MV). In this case the voltage level at the end of a MV feeder can

be higher than the voltage at the MV or HV/MV substation. The unpredictability of some DGs (e.g. PV and wind turbines) can make the voltage level control in MV networks more complex.

The MV network in the Netherlands is completely underground cable network. The power factor in the distribution networks is very close to 1 [4]. Therefore, the real power influences the magnitude of the voltage difference between two points in the network the most. The voltage will rise when the generated real power at the POC is higher than the power consumed and the voltage level at some POCs in the network can be higher than the voltage level at the MV/LV or HV/MV substation. Therefore, DGs connected to the distribution network can significantly influence the voltage conditions in the network.

Voltage level along a MV feeder with DGs

The effect of DG units on the voltage level in MV network is presented in this section. The model of a genuine 10 kV MV network (ring structure operated radially) with 10 MV/LV substations is used. The average distance between two substations is 1.2 km and the short circuit power of the substation is typically 300 MVA [4].

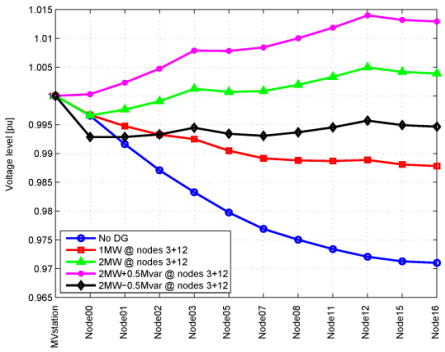

Fig. 3. Voltage levels along the 10 kV feeder with DG.

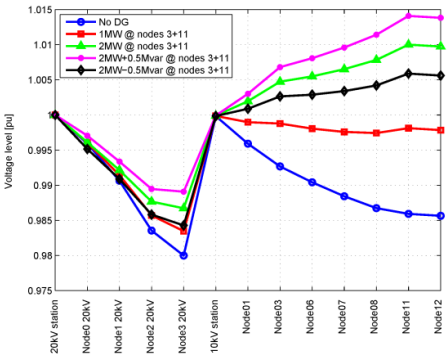

Fig. 4. Voltage levels along the 20/10 kV feeder with DG.

To evaluate the influence of DG units on the MV voltage level, two equal DGs (e.g. greenhouses CHPs) are connected to the network at nodes 3 and 12. The impact on the voltage level among the MV network due to the generated or consumed power is evaluated. In addition, to investigate the effects of DGs connected in the LV network, the power is injected also at one LV node at the end of the MV feeder. The resulting voltage levels at each MV node are presented in Fig. 3.

The largest voltage rise can be observed when both *P* and *Q* are generated. However, different control strategies can improve the MV voltage level profile (closer to 1.0 pu).

The simulation has been performed also for the new 20/10 kV MV structure, where the 20/10 kV transformers will be equipped with on-load tap changer. The automatic tap changer decouples the voltage levels at the 20 kV from the 10 kV part and can keep the voltage level at 1.0 pu at the 10 kV busbar. To investigate the effects of DGs on this structure, two DG units were connected to nodes 3 and 11 in the 10 kV part of the 20/10 kV MV structure, where the resulting voltage levels (increased voltage) are depicted in Fig. 4.

The new 20/10 kV structure reduces the feeder length of the current 10 kV network and the tap changer mitigates the voltage fluctuations in the 20 kV network [7].

In the new 20/10 kV MV network, the voltage level will vary less than in the current MV structure. Nevertheless, the tap position control and the available voltage range (based on measured voltages among the 10 kV feeders) shall be measured on-line.

The voltage level and the amount of DG

Future MV networks should increase their flexibility to accommodate more DGs. Therefore, the maximal amount of DGs connected at the MV network together with the evaluation of measurement locations is discussed here.

The maximum power supplied by DGs connected to the current 10 kV network is addressed and the voltages at the main branches of the feeder are estimated. Firstly, the maximum power of DG connected at any point along the feeder is estimated. The DG unit generates only active power and it is limited by the network capacity (I_{rated} = 373 A) and by the voltage level (leading to a voltage rise of 2 %, 6 % or 10 % of the nominal voltage V_n). Then, the resulting maximum power supplied by DG at each point in the MV feeder is depicted in Fig. 5. For example, a 1.33 MW DG unit can be connected at node 16 of the MV feeder when a voltage rise of 6 % along the feeder is acceptable.

Similar approach has been followed to evaluate the maximal power of connected DGs for the new 20/10 kV MV structure. The 20 kV part of the network has I_{rated} = 425 A and a distance between two nodes of 2 km. The results are depicted in Fig. 6.

Thanks to the automatic tap changer in the 20/10 kV substation, the DGs connected (to 10 kV or 20 kV) do not influence the voltage level in the other networks.

The new 20 kV MV network has higher capacity than the currently used structure and can accommodate more DGs. The new 20 kV MV can accommodate at least a DG unit of 1.91 MW, if the voltage rise of 6 % V_n is

acceptable (see Fig. 5) against a DG unit of 1.33 MW in the case of the current 10 kV network structure (see Fig. 6). If the DG units are distributed along the feeder, the maximum power can be estimated or generalized by using the M factor [9].

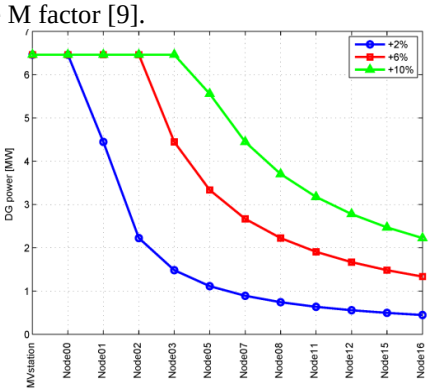

Fig. 5. Max. DG power leading to a given voltage rise in 10 kV feeder.

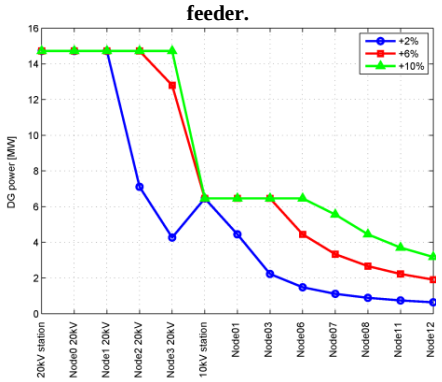

Fig. 6. Max. DG power leading to a given voltage rise in 20/10 kV feeder.

The new 20/10 kV structure has a better performance in terms of voltage level than the current 10 kV structure. Thanks to the tap changer and reduced feeder length, the voltage deviations in the network are reduced and more DGs can be connected without network extensions.

The largest voltage deviations occur at the end of a MV feeder in both MV structures. Therefore, the voltage level shall be monitored at the end of the feeder and at the DG's POC. In addition, the power supplied by DGs shall be measured to evaluate the network loading and possible reconfiguration options in the MV network.

CONCLUSIONS

The advisable operational data and their most suitable locations for the operation of future MV networks are assessed in this paper. In addition, the influence of DG units on operation of the MV network and the operational measurements are addressed.

In future MV networks, the voltage level, load currents, the active and reactive power, shall be measured at the MV side of the HV/MV substations, on both sides of the new 20/10 kV substations and on the connections of DG units. The voltage level shall be also measured at the end of the MV feeders. In accordance to the standard, those measurements shall be conducted at least as 10 minute averages.

The transformers tap positions and the available voltage range shall be monitored on-line, as well as the switch position and the short circuit currents in order to enable fast fault detection and voltage restoration.

Once the current MV network has been transformed into the new 20/10 kV network structure, the measuring devices shall become a standard fitting, only marginally increasing the substation cost. It is advisable to install the measuring devices in all those substations with the goal of gaining adequate information about the operational aspects of future MV networks. The operational information can be utilized by the network operator for (remote) operating and monitoring of their MV networks, as well as for assets management procedures.

REFERENCES

[1] CENELEC, “EN 50160 - Voltage characteristics of electricity supplied by public distribution networks,” *EN 50160:1999E*, 1999.

[2] Liander N.V (onderdeel van alliander), “Kwaliteits- en capaciteitsdocument elektriciteit 2010-2016,” 2010.

[3] F. Provoost and W. Van Buijtenen, “Practical experience with fault location in MV cable network,” in *Electricity Distribution - Part 1, 2009. CIRED 2009. 20th International Conference and Exhibition on*, 2009, pp. 1-4.

[4] F. Provoost, *Intelligent Distribution Network Design*. PhD thesis, Eindhoven University of Technology, 2009.

[5] X. Zhang, E. Gockenbach, V. Wasserberg, and H. Borsi, “Estimation of the Lifetime of the Electrical Components in Distribution Networks,” *IEEE Transactions on Power Delivery*, vol. 22, no. 1, pp. 515-522, Jan. 2007.

[6] D. Susa and M. Lehtonen, “Dynamic Thermal Modeling of Power Transformers: Further Development - Part I,” *IEEE Transactions on Power Delivery*, vol. 21, no. 4, pp. 1961-1970, Oct. 2006.

[7] P. Kadurek, J. F. G. Cobben, and W. L. Kling, “Smart transformer for mitigation of voltage fluctuations in MV networks,” in *2011 10th International Conference on Environment and Electrical Engineering*, 2011, pp. 1-4.

[8] P. Van Der Wielen and F. Steennis, “First field experience of on-line partial discharge monitoring of MV cable systems with location,” in *Electricity Distribution - Part 1, 2009. CIRED 2009. 20th International Conference and Exhibition on*, 2009, pp. 1-4.

[9] Cobben J. F. G., *Power Quality Implications at the Point of Connection*. PhD thesis, Eindhoven University of Technology, 2007.