LIMITATION OF SHORT-CIRCUIT POWER DUE TO DISTRIBUTED GENERATION

Johan MORREN
Enexis B.V. / Eindhoven University of Technology – The Netherlands
Johan.Morren@enexis.nl

Thijs RECKERS
Eindhoven University of Technology – The Netherlands
T.J.M.Reckers@student.tue.nl

Maarten BERENDE
Enexis B.V. – The Netherlands
Maarten.Berende@enexis.nl

Han SLOOTWEG
Enexis B.V. / Eindhoven University of Technology – The Netherlands
Han.Slootweg@enexis.nl

ABSTRACT

Introduction of DG units in the network will result in increasing fault current levels. In this contribution several solutions are described to limit the fault currents in the network, in order to avoid overloading and destruction of components in the networks. The main focus of the paper is on the application of fault current limiters.

INTRODUCTION

In many countries the share of Distributed Generation (DG) is rapidly increasing. In the Netherlands the largest share of DG consists of wind energy and combined heat and power (CHP) generators. Almost all of the DG units are connected to the medium voltage network.
Integration of DG in the network raises several issues, such as network loading, voltage control, stability, network protection, etc. These issues have been discussed extensively in literature (for example [1-4]). One of the most important issues in the Netherlands is the contribution of DG to short-circuit power, which results in exceeding the short-circuit capacity of components in the network. This issue has gained less attention in literature so far. One of the reasons that especially short-circuit power is a problem in the Netherlands, is the fact that distances are normally small, and that the MV-network exists of cables, together resulting in a relatively low impedance.
The paper starts with a description of some basic characteristics of fault currents. After that several solutions will be described that have been investigated by Enexis, one of the largest Distribution Network Operators (DNO's) in the Netherlands, to find the best solutions to solve problems with overloading of components due to short-circuit power. One of the solutions is applying fault current limiters. This solution will be investigated in more detail in the remaining part of the paper. Finally a practical case study will be described.

SHORT-CIRCUIT CURRENTS

The fault current that will flow in case of a short-circuit can be described by three important parameters:

- Initial symmetrical short-circuit current (I_k'')
- Peak short-circuit current (I_p)
- Steady state short-circuit current (I_k)

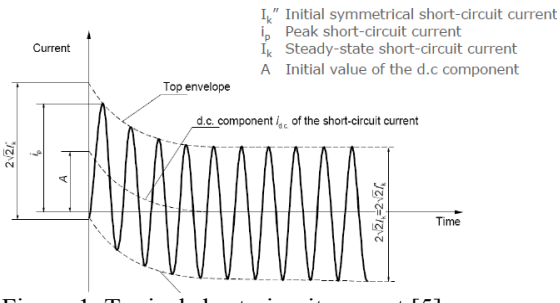

Figure 1. Typical short-circuit current [5]

The first peak in the fault current (I_p) causes high dynamic and mechanical stresses on the components in the network. It will be reached within 10 ms after occurrence of the fault. Conventional circuit breakers in the network will not be fast enough to interrupt this current and therefore components have to be designed such that they are able to withstand these currents.
The initial symmetrical short-circuit current I_k'' and the steady state short-circuit current will result in large losses and might therefore cause thermal overloading. Whether or not overloading occurs will also depend on the time however (I^2t). And therefore also depend on protection settings. In the case of Enexis the time settings are in most cases short enough to avoid thermal problems, and most problems are due to the peak short-circuit current I_p.

POSSIBLE SOLUTIONS

A number of solutions to overcome the problem due to high short-circuit power are possible. The most important are:

1. Replacement of components
2. Splitting of busses using spare HV/MV transformer
3. Apply fault current limiters

The three solutions will be described briefly.

Replacement of components

The first solution to overcome problems is to replace the components that will be overloaded. In practice this normally will be a very expensive solution however, because often complete (double busbar) switchgear installations have to be replaced, as well as a lot of ring-main units and other secondary switchgear. Therefore in most cases it will first be investigated whether there are other solutions.

Using spare transformer

Another option is to make use of the spare transformer in the HV/MV substations and to distribute the DG units over both transformers via the duplicate MV busbar. Problems occur however when one of the transformers is not available in case of a failure or during maintenance. Probably a part of the DG's then has to be disconnected.

Fault current limiter

The last solution that has been identified is to use so-called fault current limiters (FCLs). The main principle is that they have a low impedance in normal operation, and a high impedance in case of a fault. There are various different types of these devices.

Comparison of solutions

Some time ago Enexis has, based on its risk-based asset management (RBAM) methodology, investigated which of the solutions were most effective and gave the largest risk reduction [6]. In the analysis it was concluded that both using the spare transformer and the application of FCLs result in only a limited risk reduction. In this analysis only one type of FCL was investigated, namely an I_s-limiter. I_s-limiters have some drawbacks however as fuses have to be replaced after each operation and a strong possibility of unselective tripping exists. Another disadvantage is that the supply of energy is completely interrupted and first the fuse has to be replaced before it can be restored. This can result in a high value of the customer minutes lost.
In this paper some other types of fault current limiters will be investigated, in order to see whether they can be advantageous above the I_s-limiter.

FAULT CURRENT LIMITERS

Introduction

The basic principle of an FCL is that in some way an impedance is introduced in the network, either permanent or at the moment the fault occurs. The most important requirements of an FCL are:

- Limitation of peak current;
- Ratio between nominal current and limited short-circuit current;
- Low impedance and low losses in normal situation;

These characteristics will be discussed in more detail in the next sections.

Limitation of peak short-circuit current

The first peak in the short-circuit current occurs within 10 ms after occurrence of the fault. The minimum opening time of the circuit breakers in the network will be much longer however, and therefore they are not able to protect the components in the network against the high peak currents. Therefore components have to be designed in order to be able to withstand the peak currents.
This implies that one of the main requirements for FCLs is, that they are fast enough to limit the fault current within 10 ms to avoid overloading due to the peak short-circuit current.

Ratio between fault current and nominal current

Another important characteristic of an FCL is the ratio between the limited fault current and the nominal current. This value should be low. In an MV network short-circuit power is supplied by the HV/MV transformer and the DG units that are connected to the network. The relative short-circuit voltage u_k of transformers is mostly in the range between 10 and 20%. This means that the short-circuit current supplied by the transformer is maximum 5 to 10 times its nominal current. This means that for an FCL in series with a transformer in its limiting operation, this ratio should be in the same range or smaller, in order for the FCL to be useful. So, preferably:

$$R = \frac{I_{\lim}[A]}{I_{nom}[A]} \leq 5 \qquad (1)$$

Impedance and energy losses

In normal operation the FCL will carry the load current. The impedance of the FCL in this case should be low, to avoid a large voltage drop and high energy losses in normal operation.

Types

A short summary will be given of the most important types of FCLs.

Choke coil

The easiest way of fault current limiting is to install a large choke coil in the network. The (high) impedance of this coil will limit the fault current.
Its main advantages are that it is simple and robust, and that it is proven technology. The main disadvantages are the voltage drop and the losses during normal operation, and the size, which is often quite big.

Superconductors

Superconductor FCLs use the relationship between the resistance and temperature in superconductors to limit fault current. Superconductor materials have zero resistance when they are cooled below their critical temperature. As soon as a fault current is noticed, the losses, and therefore the temperature will increase. As a result the the temperature will increase above its critical temperature and the FCL will get a much higher resistance. This transition is very fast and therefore also the peak short-circuit current can be limited quite well.
Advantages of superconductors are their low losses and their fast response. The main disadvantages are that they are very expensive and that most of them are still in a development stage and not commercially available yet.

Semiconductors

Another possibility is to use semiconductor switches. The main advantage of a limiter based on power electronics is its good controllability and its fast response. Main disadvantage are the losses in the semiconductors during normal operation.

There are 2 main types of solid state current limiters: resonance based devices and impedance switch-in limiters. The resonance based FCL has a LC-circuit with a low impedance at steady-state operation. During a fault, power electronic switches isolate a capacitor or inductor from the device, introducing a large impedance into the system.

The basis for impedance switched bypass limiters operation is a reactance placed in series in the network. A pair of thyristor switches are placed in shunt with the impedance and operated during alternate half cycles of the voltage waveform, creating a low impedance path. In the event of a fault, the gating signals to the thyristor switches are blocked, resulting in large impedance being introduced into the system.

Magnetic fault current limiter

Several types of magnetic fault current limiters exist. All are based on the fact that a coil, or transformer, has a very low impedance when it is in saturation. So, during normal operation the coil is kept in saturation. At the moment a fault occurs the large fault current forces the coil out of saturation, implying a much higher impedance.

Advantages of magnetic fault current limiters are their reliable operation, their gradual and smooth change of impedance, their good limiting capabilities ($R \leq 8$) and that they are commercially available. Disadvantageous are their large dimensions and their high price.

I_s – Limiter

Another option is applying a so-called I_s-limiter. Its basic principles are shown in figure 2.

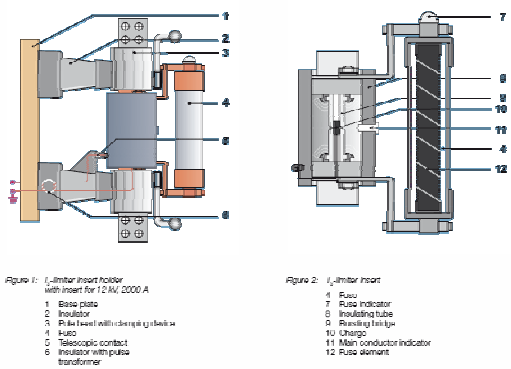

Figure 2. I_s-limiter (courtesy of ABB)

The I_s-limiter consists of two conductors in parallel. The main conductor carries the rated nominal current (up to 5kA). After tripping the parallel fuse limits the short-circuit current in a very short time (< 1 ms). A 'normal' mechanical breaker can not be used for the main conductor as it is not fast enough. Therefore an electronically triggered charge is used as switching mechanism.

The big advantage of the I_s-limiter is, that it is very fast, its good R-ratio, its size and its low losses. The main disadvantages are that after each operation the explosives and fuses have to be replaced. This implies relatively high costs and longer interruption times. Also is the I_s-limiter sensitive to incorrect operation.

Summary and conclusion

The most important difference between fault current limiters, is their way of limiting the fault current:

- Damping; creating a high impedance to the fault current
- Switching; completely interrupting the fault current

The most promising damping FCL is the superconductor FCL. It has almost no losses, no voltage drop and low reset time. Only energy is needed for cooling. Superconductor FCL are still under development, however, and not yet commercially available.

As a switching FCL the I_s-limiter can be applied. Integrating it does not negatively affect the grid. The switching limiters are cheaper than damping limiters. However when a fault occurs, the fuse (and explosives) has to be replaced. This increases costs and reset time in case of a fault.

SELECTION OF FCL

When it is decided to apply an FCL, important questions are which type of FCL should be used, and where they should be placed in the network. A procedure has been developed to find the optimal location and type of FCL. This procedure, which searches the optimal solution from a cost perspective, will be described briefly.

The goal of the procedure is to find a configuration for which C_{tot} is as low as possible (i.e. finding min [C_{tot}]):

$$C_{tot} = \alpha_1 \cdot C_{purchase} + \alpha_2 \cdot C_{maintenance} + \alpha_3 \cdot C_{fault}$$

It is beyond the scope of this paper to describe all parameters in this equation. Most important to understand is that it takes into account the purchasing costs and maintenance costs of the FCL and the costs of a fault. This C_{fault}, can be the costs of repairing or replacing components which have been destroyed because of to high fault currents, but also the costs of customer minutes lost.

The procedure consists of the following steps:

Selection

Step 1. Create a list of possible fault locations;

Step 2. For each of the possible fault locations, conduct a short circuit calculation using IEC (60)909;

Step 3. Remove the fault locations for which no peak fault current problem occurs;

Step 4. For each of the remaining fault locations: Determine the probability of a fault to occur;

Step 5. Select the fault location with the highest fault

occurrence probability.

Calculation of reference cost

Step 6. Calculate the total costs of a fault at this location, without adding fault current limiting.

Adding fault current limiting

Step 7. Determine possible fault current limiter locations;

Step 8. For each (combination) of the locations: calculate the total costs of a fault, using the two different types of fault current limiters at the location(s);

Step 9. Select the situation with the lowest total costs caused by a fault and permanently add the fault current limiter.

Step 10. Remove the fault location from the list and restart from step 2, repeating until there is no fault location left in the list

CASE STUDY

In this chapter the results will be shown of the application of the procedure described in the previous section. It has been applied to the network shown in figure 3. It is a simplified version of a real network in the south-western part of the Netherlands. In this network a large number of CHP-plants with synchronous generators have been installed recently. This results in exceeding the peak short-circuit capacity of substation X in case of a fault in that substation, or in one of the cables behind that substation. The rated I_{peak} of the substation is 50kA, while in case of a fault values up to 65kA can be reached.

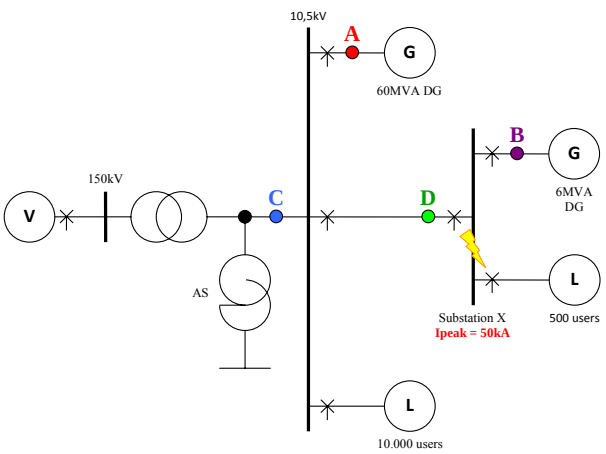

Figure 3. Case study network

Four different locations have been identified, where an FCL can be placed. The total costs C_{tot} for each of these locations have been summarized in table 1.

As can be seen the best solution is to place an FCL at location D. For this location a switching FCL has advantage above a damping FCL. This is because the cost of a switching FCL, which is assumed to be cheaper than a damping FCL. Also a switching FCL at location A might be an option, as this removes the short-circuit contribution of 60MVA DG. An FCL at location B results in such a high cost, as it is not enough to limit I_p at substation X to a value below its rated value, as the main short-circuit contribution is coming from the transformer and the 60MVA DG. Therefore even without the contribution of the 6MVA DG the substation will be destroyed, resulting in high costs.

	Switching FCL	Damping FCL
Position A	€155.500	€542.500
Position B	€1.420.000	€1.505.000
Position C	€1.457.500	€542.500
Position D	€107.500	€192.500

Table 1. C_{tot} for different types and locations of FCL

SUMMARY AND CONCLUSION

In this paper it has been discussed that the introduction of DG in the MV-network results in to high short-circuit power in some cases. Several solutions to overcome this problem have been investigated. The paper focused on the application of fault current limiters (FCLs). Several types of FCL have been described and compared to each other. Next a procedure has been described to investigate what type of FCL should be applied and what is the optimal location for it. Finally a case study has been presented. From this case study it can be concluded that choosing the right location is important and that a switching FCL has advantages above a damping FCL.

REFERENCES

[1] E.J. Coster, *Distribution Grid Operation Including Distributed Generation*, Ph.D.-thesis, Eindhoven University of Technology, Eindhoven, The Netherlands, 2010.

[2] J. Morren, *Grid support by power electronic converters of Distributed Generation units*, Ph.D.-thesis, Delft University of Technology, The Netherlands, 2006.

[3] R.C. Dugan, T.E. McDermott, "Distributed Generation", *IEEE Industry Applications Magazine*, vol. 8, no. 2, pp. 19-25, Mar/Apr. 2002.

[4] N. Jenkins, "Impact of Dispersed Generation on Power Systems", *Electra*, no. 199, pp. 6-13, 2001.

[5] IEC 60909-0:2001, *Short-circuit currents in three-phase a.c. systems, Part 0: Calculation of currents*, IEC Standard, 2001.

[6] J. Morren, J. Meeuwsen, H. Slootweg, "New network design standards for the grid connection of large concentrations of distributed generation", *Proceedings Cired 2009*, Prague, 8 – 11 June 2009.