REGULATORY AND FINANCIAL HURDLES FOR THE INSTALLATION OF ENERGY STORAGE IN UK DISTRIBUTION NETWORKS

Oghenetejiri ANUTA
Durham University – UK
o.h.anuta@dur.ac.uk

Andrew CROSSLAND
Durham University – UK
andrew.crossland@dur.ac.uk

Darren JONES
ENWL - UK
darren.jones@enwl.co.uk

Neal WADE
Durham University – UK
n.s.wade@durham.ac.uk

ABSTRACT

This paper examines the feasibility of energy storage in in a low voltage distribution network to facilitate increased Distributed Generation (DG), and electricity demand. Modelling is used to quantify technical and financial benefits of storage over a 10 year period. Technical benefits are achieved through loss reduction, prevention of voltage rise and peak shaving. However, for energy storage to be financially feasible, all multi-stakeholder benefits need to be included in any investment strategy and regulation needs to be updated to foster energy storage adoption.

INTRODUCTION

The UK government has a target of 15% renewable energy penetration by 2020, and for increased electrification of transport and heating systems [1]. The resulting increase in electrical energy demand and integration of Renewable Energy Sources would change the way Low Voltage (LV), 400V, networks operate. Although this may have positive impacts for network operators, such as reduced losses, there is a risk of negative effects such as reverse power flow, voltage fluctuation and power quality problems [2, 3]. Electrical Energy Storage (EES) is seen as one way of addressing these problems and benefits include upgrade deferral through peak shaving, voltage control, power flow management, post fault restoration, energy market arbitrage, network management, and loss reduction [4, 5]. A combination of these benefits could make EES an attractive technology to Distribution Network Operators (DNOs) by enabling improved efficiency, and fulfilment of commercial and regulatory requirements in the UK.

This paper aims to evaluate energy storage from the perspective of a DNO through modelling of a LV distribution network. Financial and regulatory hurdles are first discussed, followed by a description of a detailed technical and economic model. Finally, results are presented and discussed.

DNO FINANCIAL/REGULATORY ISSUES

DNO's operate, maintain and invest in the distribution network between transmission and customers. Each of the UK's fourteen DNOs is regulated by the Office of Gas and Electricity Markets (OFGEM). OFGEM incentives encourage DNOs to continuously improve quality of service, security, reliability and network capacity. Furthermore, there are incentives for DNOs to increase the amount of DG in their networks [6]. A reduction in loss would assist in meeting environmental targets as losses in the distribution network currently accounts for 98% of DNO operational carbon emissions (or 1.3% of total UK greenhouse gas emissions). Accordingly, the £0.06/kWh financial incentive to reduce loss reflects the current carbon value [7]. The benefits of upgrade deferral may also be significant for DNO's, particularly given high capital costs of electrical equipment and aging assets.

UK supply companies and DNOs must operate separately and consequently DNOs cannot partake in the electricity market, hence arbitrage benefits do not apply.

METHODOLOGY

In order to investigate technical and financial benefits of ESS to DNOs, this paper considers a case study of a LV network in Northern England (Figure 1). This network contains 406 domestic loads distributed between four ways from a secondary (11kV/400V) transformer. The 2.5km feeder cable to the primary substation supplies nine other LV networks. As of December 2011, 53 properties have domestic Photovoltaic (PV) systems installed, of average rating 2.03 kWp. These provide 7.3% of current annual demand in the LV network. In addition, 247 properties have suitable roof orientation to adopt a PV system in the future. If installed, these could provide 34% of local demand (thus meeting the 2020 UK target for renewable energy at this local level).

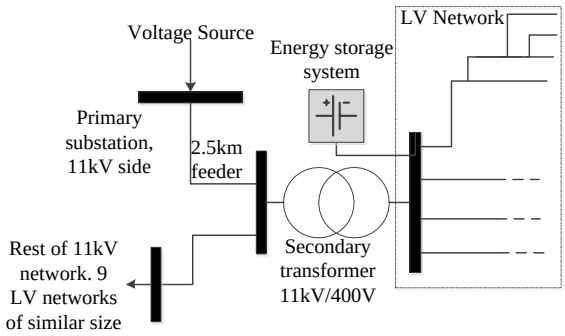

Figure 1: Overview of network under study

A bespoke temporal load flow tool has been developed to analyse such networks under various scenarios. This is built using a Matlab control program and an Open-DSS [8] load flow engine. Using GIS and technical data provided by the DNO, Electricity North West Ltd., a detailed representation of the network has been developed. Hourly demand [9] and PV generation datasets [10] are used to allow loads and generators to be modelled individually.

Modelling Scenarios

Reflecting the uncertainly in future change in demand, this study considered two scenarios. For each, the effect of adding EES is measured and compared to a base case with no EES. In scenario 1, an annual load growth of 2% is simulated to reflect a higher growth in demand. In scenario 2, load growth is constrained to 0.04% to reflect a low growth pathway. Both scenarios are considered over a ten year period (starting 2012). Twenty additional PV systems are installed annually to investigate the impact of UK renewable energy targets on this LV network.

Model outputs

The decision for DNO's to implement EES will largely be based on the DNO's financial structure and targets for loss reduction, thermal constraints, network upgrades and power quality. The model is therefore designed to provide a number of parameters at each time step. Voltage unbalance must not exceed 1.3% for systems with a nominal voltage below 33kV [11] and is calculated using equation 1.

$$\%VUF = \frac{\text{negative sequence voltage}(V2)}{\text{positive sequence voltage }(V1)} \times 100\% \quad (1)$$

Voltage rise may occur when PV generation increases and must not exceed 253 V [12]. This causes inverters in PV systems to disconnect and turn off the PV export to the grid. Furthermore, when generation exceeds demand, there will be reverse power flow through the secondary transformer which could affect the performance of the 11kV network. The loading of an element (equation 2) must not exceed the 100% thermal limit.

$$\text{Thermal Limit} = \left(\frac{\text{Conductor power}}{\text{Conductor rating}}\right)_{max} \times 100\% \quad (2)$$

Real losses in the LV network, transformer and feeder are reported separately. Losses within the 2.5 km feeder account for additional power being delivered to the rest of the 11kV network to more accurately reflect the high loading on the feeder.

Initial Results

A study of the network over ten years under both demand scenarios was completed. Voltage unbalance and thermal limit problems were not expected with controlled installation of PV. However, there are opportunities for EES to reduce loss, reverse power flow and voltage rise (Figure 4). The latter is important as there would be curtailment of PV without large amounts of the network being re-conductored. Upgrade deferral of the 500 kVA transformer through peak shaving may be needed, given that a peak input power of 453 kW is in year 9 under scenario 1 (at worst case power factor 0.9).

Energy Storage System (ESS) Design

The ESS, designed to reduce these problems, is located on the secondary transformer as shown in Figure 1 (the only suitable site in the real network). Devices with power rating 150 kW and storage capacity of 250 kWh and 500 kWh are modelled: realistic sizes for this network. Under the control methodology, the ESS is charged using reverse power flow or from the 11kV network during periods of low demand. This energy is discharged to reduce feeder load, voltage rise and peak power. An iterative process was used to determine effective control parameters and the methodology was not changed between years. In the financial analysis, the ESS was modular and upgraded over the assessment.

Economic Analysis

An economic analysis was carried out on the results to evaluate the financial viability of installing ESS for DNOs under the current regulatory framework. Against a "do-nothing" scenario, the economic analysis considers capital (installation), operational/replacement costs and benefits. Cost and benefits are based on the following:

- Storage system service life of 10 years; discount rate (d = 6%), inflation rate (e = 4%), DNO annual capital charge (A = 7%), loss incentive (£0.06/kWh), and average wholesale electricity price (£0.049/kWh) are constant;
- ESS installation at start of assessment (year 1).
- Maintenance does not affect the operation of the ESS and adds negligible cost to DNO;
- Secondary transformer upgrade cost (£12,000/unit) and LV cable upgrade (£60,000/km)

Benefit-Cost Analysis

Using the methodology from [13], a present value analysis was carried out using a Present Worth Factor (PWF). This considers inflation and discount rates and ESS service life, calculated using equation 3.

$$\text{Present Worth Factor}(PWF) = \sum_{i=1}^{10} \frac{1+e^{(i-0.5)}}{1+d^{(i-0.5)}} \quad (3)$$

The cost of an ESS is affected by its capacity, power rating, and round-trip efficiency. Lead-acid batteries with carbon enhanced electrodes were chosen as the most cost effective technology. The capital cost of the system, obtained from equation 4, uses prices taken from [14]. This is spread over the ten year investment. Costs obtained from equation 5, are the present value of capital, operating and replacement costs.

Benefits are determined based on the gains from implementing ESS to alleviate and resolve network issues against other intervention methods. Equation 6 is used to calculate the Net Present Value (NPV) of the following: loss reduction, upgrade deferral, reduced reverse power and voltage rise. The Benefit-Cost Ratio (BCR) is given by dividing NPV benefits by costs.

$$\text{Capital Cost} = \left(\text{Capacity Cost} \times \frac{\text{ESS Capacity}}{\text{ESS Efficiency}}\right) + (\text{Power Cost} \times \text{ESS Power}) \quad (4)$$

$$\text{ESS Cost} = \sum_{y=1}^{Num_{yr}} \sum_{ess=1}^{Num_{ESS}} \left((\text{Capital Cost} + \text{Replacement Cost}) \times A + \left(\text{Electricity Cost} \times \frac{\text{Charging Energy}}{\text{ESS Efficiency}}\right)\right) \times PWF_y \quad (5)$$

$$\text{ESS Benefit} = \sum_{y=1}^{Num_{yr}} \sum_{ess=1}^{Num_{ESS}} \left((\text{Loss reduction} \times \text{Incentive}) + \text{Upgrade Deferral Benefit} + \text{Other Benefits}\right) \times PWF_y \quad (6)$$

Figure 2: Equations used in financial analysis [6, 14, 15]

RESULTS

The impact of the ESS on upgrade deferral can be obtained by measuring the reduction in peak power through heavily loaded cables and equipment (Figure 3). For both the 250 kWh and 500 kWh ESS there is a reduction in peak power flow through the transformer which prevents the transformer upgrade highlighted in the initial results for scenario 1. However, it is not possible to reduce both peak power and voltage rise with the current control methodology and a 250 kWh ESS. In this case re-conductoring would be required.

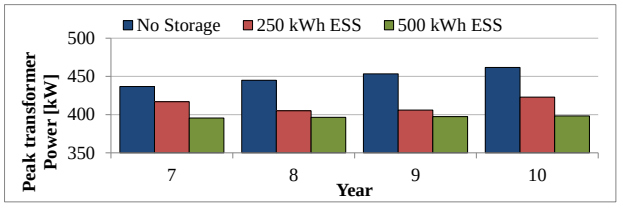

Figure 3: Peak power through transformer (scenario 1)

The ESS is able to significantly reduce the number of voltage rise events (shown in Figure 4 for 250 kWh and 500 kWh devices). This limits the amount of times that the inverters in PV systems switch off, and consequently improve the penetration of DG in this network. The effect is much more significant with a 500 kWh ESS as it can absorb necessary amounts of power for longer. In both scenarios, voltage control delays the requirement for network re-conductoring and provides a large financial benefit to the DNO.

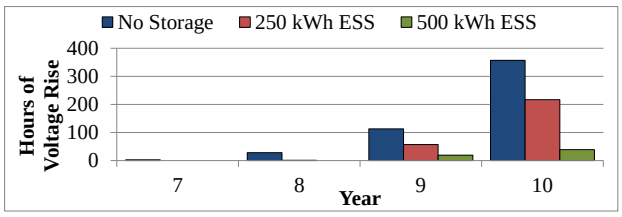

Figure 4: Hours of voltage rise per annum (scenario 2)

Although these results show technical benefits, it is also important to consider the financial case. The NPV of benefits and costs of ESS implementation and the BCR (profitability for a DNO) are shown in Figure 5 and Table 1. Within Table 1, the effect of the ESS in reducing loss against a base case with no storage system installed is shown. In terms of energy, large amounts of loss reduction can be achieved (6-17MWh over ESS lifetime), but there is little financial remuneration for doing so compared to lifetime costs. Other benefits such as upgrade deferral (transformer upgrade and network re-conductoring) are much more significant.

During the ten year operational period of the ESS, the profitability is unrealised (BCR ≥1) due to the high investment and the limited number of direct benefits for DNOs. For both scenarios, it was found that the benefits of an ESS are much more significant as PV penetration increased. With more DG, there are more problems to address and more reverse power to charge the ESS (enabling more interventions).

Table 1: Lifetime financial analysis (NPV in £000s)

	Scenario 1		Scenario 2	
ESS capacity [kWh]	250	500	250	500
ESS (lifetime) Cost	£81.5	£123.2	£87.8	£159.9
ESS benefit	£2.3	£147.7	£145.3	£145.8
Reduced loss incentive	*£0.2*	*£0.7*	*£0.4*	*£0.9*
Defer transformer upgrade	*£2.1*	*£2.1*	*Nil*	*Nil*
Defer re-conductoring	*Nil*	*£144.9*	*£144.9*	*£144.9*
Profit	**-£79.2**	**£24.5**	**£57.5**	**-£14.1**
BCR	**-0.97**	**0.20**	**0.65**	**-0.09**

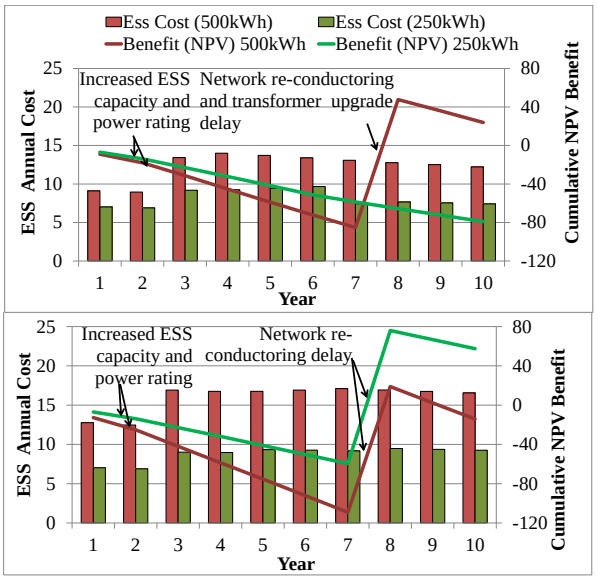

Figure 5: NPV of DNO benefits and ESS cost over investment period: scenario 1 (top), scenario 2 (bottom)

DISCUSSION

Within the study, the ESS is seen to reduce losses, peak power and curtailment of PV (through reduced reverse power flow and voltage rise). Significant financial gain comes from upgrade deferral, particularly by delaying network re-conductoring. However, uncertainty in knowing when upgrades are required (dependent on asset lifespan) adds risk to investors.

Some financial benefits are not accounted for such as; revenue from arbitrage; reduced customer interruptions/ minutes lost (which have average unit cost to DNOs of £9.20 per customer interruption and £12.86 per minute lost); and benefits on the higher voltage distribution networks. Similarly, there is no direct benefit to DNOs of reducing curtailment of PV, despite the help this gives to PV owners. The difficulty in valuing these and the reliance on uncertain factors, such as discount rate and electricity price makes it difficult to fully calculate returns.

In order to improve the financial performance, ESS size could be optimised to improve benefits or reduce capital cost. Furthermore, during the iterative approach used to design the ESS, it became clear that improving the control algorithm can improve the benefits at a low cost. The authors believe that further work on the control methodology will improve financial results.

Regulatory issues surrounding the role of EES in future UK electricity networks are expected to be addressed (at least in part) by the Department for Energy and Climate Change (DECC) in the near future [16]. Within this policy, the authors hope that issues surrounding the ownership of EES within the UK power system will be resolved. Specifically, there is currently no framework to allow DNOs to participate in electricity market arbitrage. In addition, the DNO pays for electricity used to charge the device, but there is no return for discharging that energy into the network. Allowing this would reduce annual operating costs by up to £1000 in this model, before optimising for arbitrage benefits. Clearly, benefits need to be accrued by multiple stakeholders to make storage financially viable. In one example methodology, a third party could capitalise on benefits from arbitrage and the DNOs could pay them for improvements provided to their LV network.

CONCLUSION

This paper has shown that the increased penetration of DG and future load growth in LV networks presents a number of challenges to DNOs. Energy storage may allow upgrade deferral and enable more DG by reducing voltage rise. Profitability of EES may be improved if multi-stakeholder benefits, including arbitrage, are considered. On-going work at Durham University is looking at how improved control and optimised ESS sizing can further improve this. Regulatory issues surrounding storage ownership and operation need to be updated if storage is to become financially viable.

REFERENCES

[1] DECC, 2011, “Planning our electric future: a White Paper for secure, affordable and low carbon electricity,” London.
[2] R. Passey, T. Spooner, I. MacGill, M. Watt, and K. Syngellakis, 2011, “The potential impacts of grid-connected distributed generation and how to address them: A review of technical and non-technical factors,” *Energy Policy*, vol. 39, no. 10, 6290-6280.
[3] A. A. Bayod-Rújula, 2009, “Future development of the electricity systems with distributed generation,” *Energy*, vol. 34, no. 3, 377-383.
[4] N. S. Wade, P. C. Taylor, P. D. Lang, and P. R. Jones, 2010, “Evaluating the benefits of an electrical energy storage system in a future smart grid,” *Energy Policy*, vol. 38, no. 11, 7180-7188.
[5] J. Eyer, 2009. “Electric Utility Transmission and Distribution Upgrade Deferral Benefits from Modular Electricity Storage,” Sandia National Laboratories, Albuquerque.
[6] G. P. Harrison, A. Piccolo, P. Siano, and a. R. Wallace, 2007, “Exploring the Tradeoffs Between Incentives for Distributed Generation Developers and DNOs,” *IEEE T Power Syst*, vol. 22 no. 2, 821-828.
[7] Ofgem, 2008, “Electricity Distribution Price Control Review Initial Consultation Document 32/08”.
[8] “Open-DSS” [Online]. Available: http://electricdss. sourceforge.net/. [Accessed: 01-Feb-2012].
[9] RMDS, “Standard Load Profiles.” [Online]. Available: www.rmdservice.com/guidance/standard_ load_profiles.htm. [Accessed: 05-Nov-2011].
[10] NREL, “Performance Calculator for Grid-Connected PV,” [Online]. Available: redc.nrel.gov/ solar/calculators/PVWATTS/version1/. [Accessed: 01-Jan-2012].
[11] Energy Networks Association, 1990, “Engineering Recommendation P29: Planning Limits for Voltage Unbalance in the United Kingdom,” London.
[12] “The Electricity Safety, Quality and Continuity Regulations 2002.” HMSO, no 2665.
[13] S. Schoenung and J. Eyer, 2008, “Benefit/Cost Framework for Evaluating Modular Energy Storage.” Sandia National Laboratories, Albuquerque
[14] S. Schoenung, 2011, “Energy Storage Systems Cost Update,” Sandia National Laboratories, Albuquerque.
[15] M. Ahmadigorji, A. Abbaspour, M. F.- Firuzabad, and I. Senior, 2009, “Optimal DG Placement in Distribution systems Using Cost / Worth Analysis,” *Engineering and Technology*, 746-753.
[16] DECC, 2011, “Planning our electric future: technical update,” London.