DEFINING AND REALIZING FLEXIBILITY IN DISTRIBUTION GRID

Mojtaba KHEDERZADEH
Shahid Beheshti University - IRAN
m_khederzadeh@sbu.ac.ir

ABSTRACT

The newly emerging concept of power system flexibility has different meaning for different stakeholders in power industry. At the transmission level, flexibility is interpreted as the ability to alleviate any imbalances between supply/demand, and at the distribution level relieving the overloading and/or voltage limit violations. In smart grids, there is no commonly accepted definition, as there are different constraints and facilities with respect to conventional systems. In this paper, the flexibility in distribution grids is reviewed and defined, considering different system scales from large distribution grids to an isolated microgrid with limited available resources and energy storage devices. The flexibility services which could be provided at the distribution level by Electric Vehicles and Demand Response methods are used in the conducted analysis. A case study is presented considering smooth transition of a microgrid upon disconnection from the upstream utility-grid indicating the performance of flexible resources during such events.

INTRODUCTION

Power system flexibility is a new concept that is applicable in both transmission and distribution studies, but it is still not defined in a unique way, as it is a multi-disciplinary commodity. Operational flexibility is considered as the ability of the system to quickly and securely respond to a disturbance (a component outage or a deviation of power injection). The main sources of flexibility could be in a wide range, generation sources like spinning reserves or manual fast acting, switching operations, demand response, energy storage devices, FACTS devices, available energy, power capacity and up- and down ramping [1].

As discussed in [2], flexibility can be considered for a unit/system, a time-frame/horizon, power magnitude and its ramp rate, energy shifting capability, location, and several other remarks. The paper analyzes the flexibility in the context of smart grid and the locational issue of flexibility in low-voltage distribution systems. The flexibility of a group of consumers is investigated on an aggregated basis due to the low potential/high uncertainty associated with a single consumer's flexibility. , a common practice is to aggregate the flexibility of several consumers. Different geographical points for offering flexibility are defined. It is shown that if utilities assist the DSO in mitigating the upcoming grid limit violations, then their local flexibility is beneficial.

In [3], flexibility is defined as the ability of a system at a specified operating point to respond to a range of uncertain future events by taking relevant actions within acceptable cost threshold and time frame. It is stated that flexibility is an inherent property of a system with four elements as its determinants; three operational criteria: time, actions, uncertainty and one economic criterion: cost. Flexibility metric is proposed based on these four criteria by identification the largest feasible variation range of uncertainty under given response time horizon and cost threshold at the first step. The proposed flexibility metric is obtained by comparing the largest variation range with the target range in order to find the excessive availability of the system relative to the target variation range. The response time window, cost threshold, and the target variation range are the preliminary steps to measure the flexibility. The corrective actions are dependent on the time window and cost margin.

In [4], it is mentioned that flexibility could have different properties such as flexible power, response duration, response warning time, recovery time, recovery power, and so on applicable for individual cases. It is concluded that the accuracy of the response of a load depends on the extent of the properties of its flexibility). The variability of generation that needs to be compensated for by flexibility is determined by the proposed framework.

In [5], it is explained that the increasing penetration of renewable energy resources, electric vehicles and electric heating could create different challenges in the existing electrical infrastructure such as congestion and voltage/frequency excursions as well as power imbalances due to intermittent supply. It is recommended to utilize the unused flexibility in available supply/demand such as the thermal buffer associated with electric heat pumps or CHP units provided that the amount of power that can be ramped up and down in addition to its period of sustainability could be estimated at the DSO or TSO level.

In [6], demand side flexibility is investigated by demand response of residential consumers as well as electric vehicles (EVs). An optimization method based on MILP is used to maximize the amount of renewable energy in the task of charging the EV fleet. In this way, the charging flexibility of EVs is well exploited to maximize the output of intermittent sources and to minimize the conventional generation.

In [7], security challenges of DSO are related to the increasing penetration of DGs and EVs. It is stated that in contrast to conventional systems that issues were dealt with by reinforcing the grid, the increased use of

flexibility services provided by high penetration of flexible loads and smart meters could be an alternative approach.

In this paper, flexibility is concerned with the microgrids in extreme events such as disconnection from the upstream grid. As a microgrid can perform in the utility-grid connected mode or islanding mode, it is required to analyze its flexibility in transition from the utility-grid connected mode to the autonomous mode by the available flexible loads and resources. A microgrid with fully inverter-based renewable resources is investigated in this transition. Although storage devices like batteries has a positive impact on the system flexibility and could act as a kind of buffering system, it might compromise the autonomous operation of the microgrid due to its limited capacity. However, EVs and flexible loads available in the microgrid could be effectively used in confronting the severe event of disconnection from the upstream grid and primary frequency control. Simulations are performed on a sample system to show the flexibility achieved by the coordinated application of the flexible loads/supplies.

FLEXIBILITY IN MICROGRID CONTEXT

Stabilization of a microgrid after its transition to islanding mode is quite important, because when the microgrid is disconnected from the upstream grid unintentionally, high power imbalances may occur. Therefore, flexible loads and supplies would be used in voltage and frequency control strategies to stabilize the microgrid autonomous operation. The main challenge in maintaining frequency balancing is the demand/supply. Based on the number of connected EVs and the state of charge (SOC) of their batteries, EVs with Vehicle-to-Grid (V2G) capability could be a good option to participate in frequency control strategies. Meanwhile, microgrid resiliency could be improved by demand response strategies in dealing with the event of disconnection from the upstream grid. Ultimately, the EVs and demand response strategies could effectively provide the required flexibility in primary and secondary frequency control.

Fast-response units are required to maintain frequency; such as energy storage devices, but their limited supply is an issue. EVs could be a smart solution in this regard. In this paper, controllable sources such as Solid Oxide Fuel Cells (SOFC) and Single-Shaft Micro-Turbines (SSMT), EVs and responsive loads with local controls are applied for supporting the storage system in frequency control strategy [8].

MICROGRID CONTROL STRATEGY

Figure 1 shows the flowchart of the control strategy. There are 3 different sections in this flow chart depending on the State of Charge (SOC) of the batteries as storage devices. They are explained as follows:

Storage at Good State (30≤SOC ≤70)

Normal droop concept is used in frequency control of the microgrid. In this case, SOFC and SSMT as controllable micro-sources respond to frequency excursions after the power balance is established by the storage device.

Storage at Low State (SOC<30)

For this case, the reference frequency is set according to the available EVs and participation of micro-sources in providing the power deficiency. If EVs and controllable micro-sources have enough energy, then the batteries would be charged by changing the reference frequency. Otherwise, the frequency is changed in such a way as to trigger the load shedding strategy.

Storage at High State (SOC>70)

SOC should be decreased in this state. If EVs & controllable micro-sources could discharge the batteries in a scheduled manner, then the maximum reference frequency is selected to allow EVS to be charged by maximum charging rate. Otherwise, as EVs & controllable micro-sources could not discharge the batteries, then after a delay of 40 seconds, the reference frequency is set in such a way as responsive micro-sources are sequentially tripped until the SOC is reached to the permissible values. Load shedding is done sequentially with 3 seconds time intervals by using responsive loads considering priorities. The loads are restored once the SOC is recovered.

SIMULATION RESULTS

Figure 2 shows the single-line diagram of the test system, which is a low voltage grid 400V and 50Hz with radial structure including 3 feeders [8]. Two scenarios are simulated: power imbalance (1) with supply deficiency; and (2) surplus supply. EVs are simulated in 4 different cases, i.e., 0% (no EVs), 20%, 80% and 100% of the total numbers of EVs. Figure 3 shows the frequency excursions for scenario 1, while Figure 4 shows the same for scenario 2.

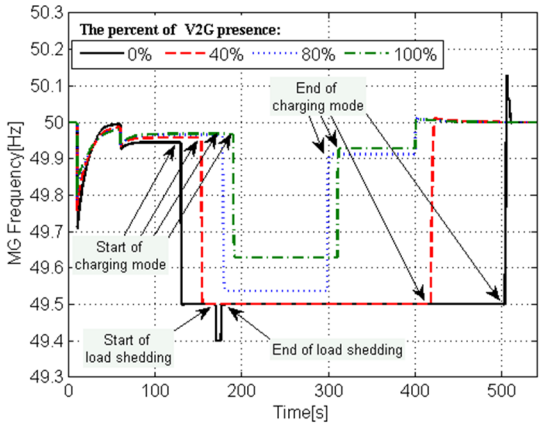

Figure 3: Frequency excursions in Scenario 1.

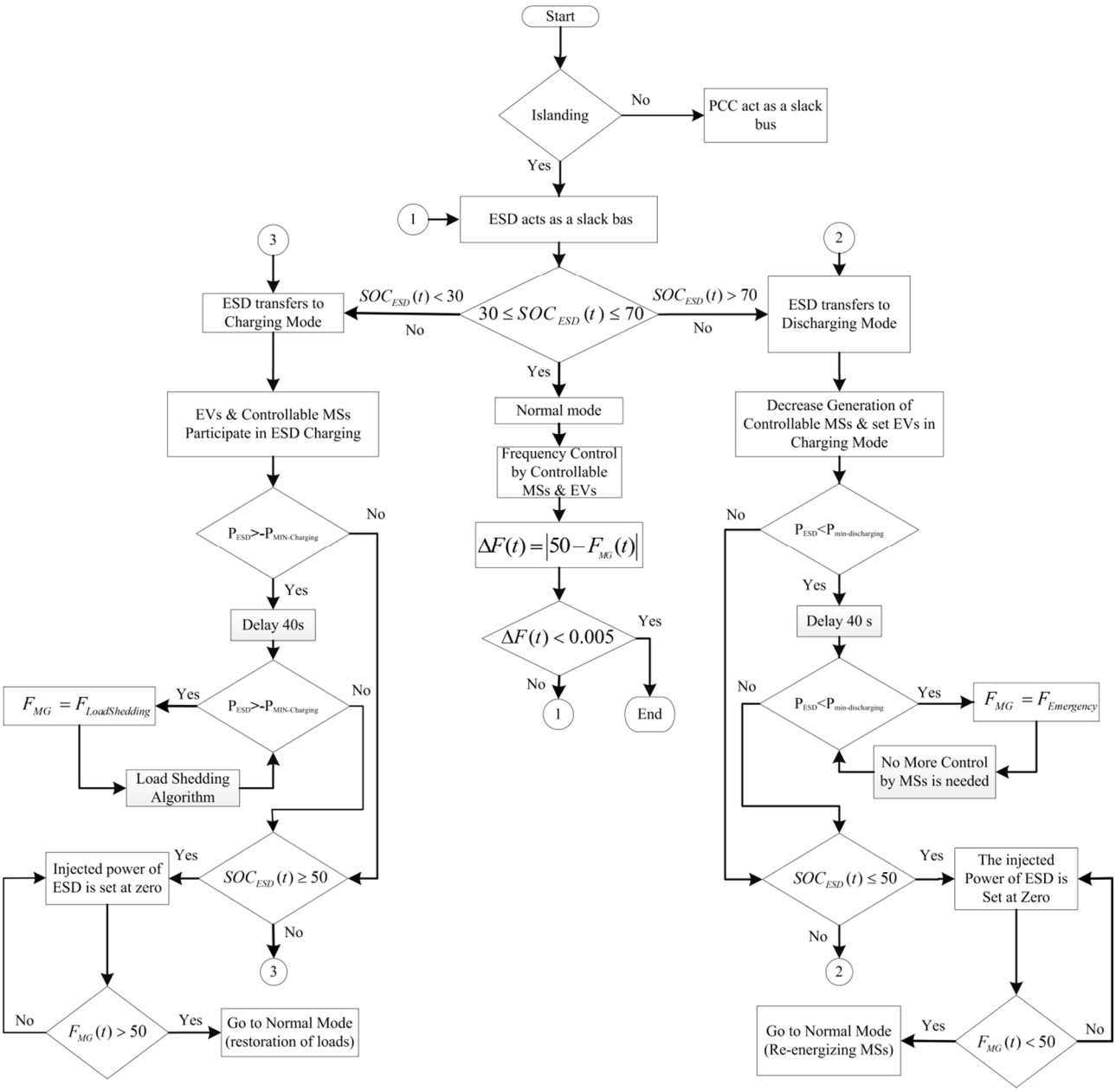

Figure 1: Flowchart of the proposed algorithm for coordinated control of the microgrid.

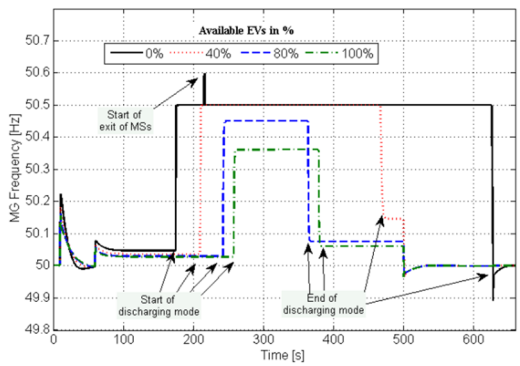

Figure 4: Frequency excursions in Scenario 2.

CONCLUSIONS

In this paper, the concept of flexibility in distribution grids is investigated. It is shown that the flexibility needs a new framework for smart grids as their inherent potential could be well exploited to overcome the deficiencies embedded by high penetration of renewable energy resources. A sample microgrid is used as the test system to show the concept of flexibility in confronting an extreme event such as disconnection from the upstream grid and continue to operate autonomously. Storage devices, controllable resources and responsive loads are used to enhance the system flexibility.

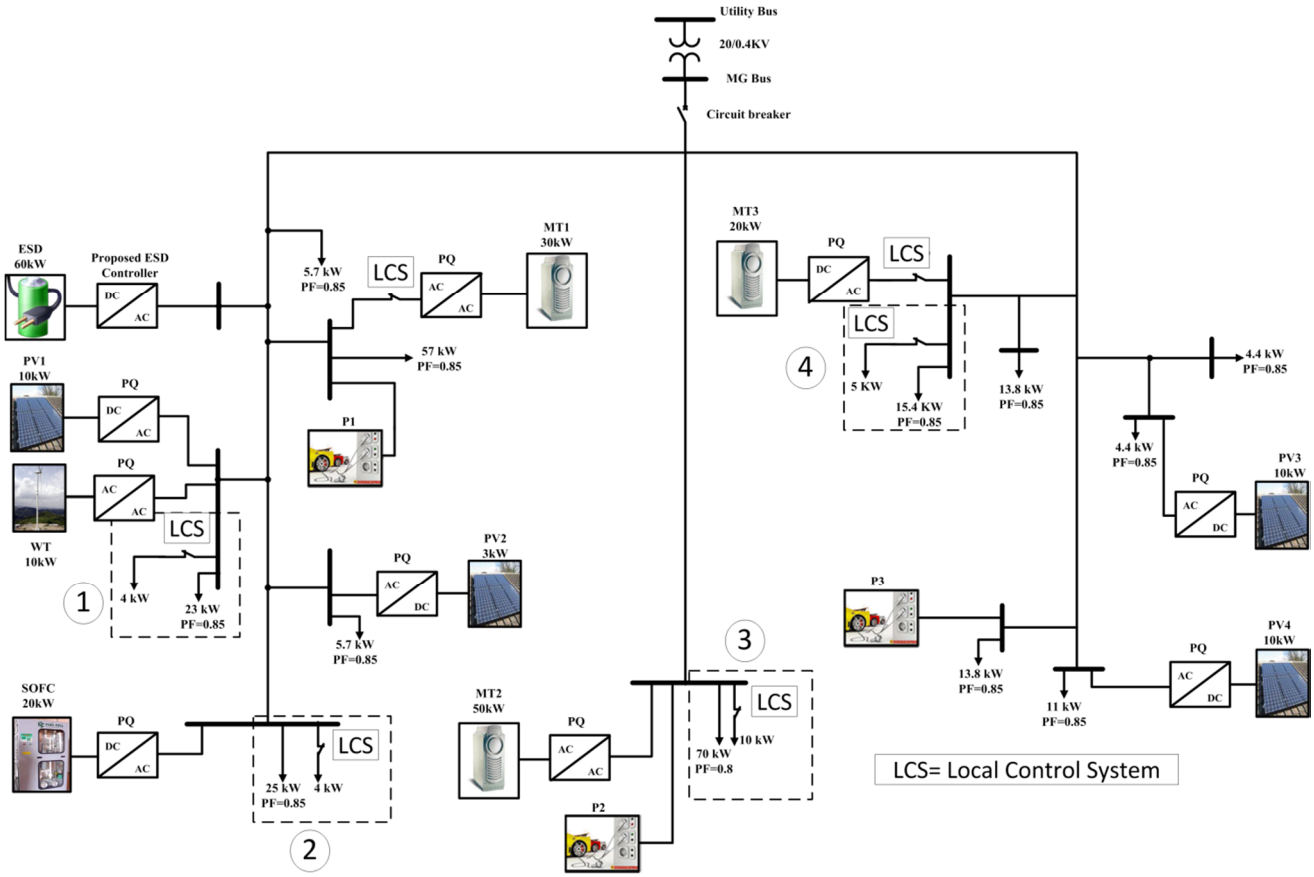

Figure 2: Test System used for Simulations

It is demonstrated that ramp-up and ramp-down capability of the system resources are important points in the system flexibility, so fast-response loads/supplies are needed in extreme contingencies. Electric vehicles with the V2G functionality could be efficiently used as fast-responsive loads to enhance system flexibility. Upon disconnection from the main grid, the power imbalance of the autonomous microgrid is alleviated by storage devices and fast-responsive loads/supplies.

REFERENCES

[1] J. Zhao, T. Zheng, and E. Litvinov, 2016, "Managing Flexibility in Multi-Area Power Systems", *IEEE Trans. on Power Systems*, Vol. 31, No. 2, pp. 1218-1226.

[2] K. Kouzelis, B. Bak-Jensen, J. R. Pillai, 2015, "The Geographical Aspect of Flexibility in Distribution Grids", *Innovative Smart Grid Technologies Conference (ISGT)*, pp. 1-5.

[3] J. Zhao, T. Zheng, and E. Litvinov, 2016, "A Unified Framework for Defining and Measuring Flexibility in Power System", *IEEE Trans. on Power Systems*, Vol. 31, No. 1, pp. 339-347.

[4] F.D. Wattjes, S.L.L. Janssen and J.G. Slootweg, 2013, "Framework for Estimating Flexibility of Commercial and Industrial Customers in Smart Grids", *Innovative Smart Grid Technologies Conference (ISGT)*, pp. 1-5.

[5] P. MacDougall, B. Roossien, C. Warmer, and K. Kok, 2013, "Quantifying Flexibility for Smart Grid Services", *Power and Energy Society General Meeting (PES)*, IEEE, pp. 1-5.

[6] S. Gottwalt, A. Schuller, C. Flath, H. Schmeck, C. Weinhardt, 2013, "Assessing Load Flexibility in Smart Grids: Electric Vehicles for Renewable Energy Integration", *Power and Energy Society General Meeting (PES)*, IEEE, pp. 1-5.

[7] K. Knezovic, M. Marinelli, P. Codani and Y. Perez, 2015, "Distribution Grid Services and Flexibility Provision by Electric Vehicles: a Review of Options", *50th International Universities Power Engineering Conference (UPEC)*, pp. 1-6.

[8] M. Khederzadeh, and H. Maleki, 2014, "Coordinating Storage Devices, Distributed Energy Sources, Responsive Loads and Electric Vehicles for Microgrid Autonomous Operation", *International Transactions on Electrical Energy Systems*, Vol. 25, pp. 2482-2498.